U.S. DEPARTMENT OF COMMERCE
National Technical Information Service

PB-265 385

State-of-the-Art: Military Explosives and Propellants Production Industry. Volume I The Military Explosives and Propellants Industry

American Defense Preparedness Association, Washington, D.C.

Prepared for

Industrial Environmental Research Lab.-Cincinnati, Edison, N.J.

Oct 76

TECHNICAL REPORT DATA
(Please read Instructions on the reverse before completing)

1. REPORT NO. EPA-600/2-76-213a	2.	3. RECIPIENT'S ACCESSION NO.
4. TITLE AND SUBTITLE State-of-the-Art: Military Explosives and Propellants Production Industry (3 vols) Vol. I - The Military Explosives & Propellants Industry		5. REPORT DATE October 1976 (Issue Date)
		6. PERFORMING ORGANIZATION CODE
7. AUTHOR(S) Patterson, James; J. Brown; W. Duckert; J. Polson; and N. I. Shapira		8. PERFORMING ORGANIZATION REPORT NO.
9. PERFORMING ORGANIZATION NAME AND ADDRESS American Defense Preparedness Association Union Trust Building 15th and H Street, N. W. Washington, D. C. 20005		10. PROGRAM ELEMENT NO. 1BB610
		11. CONTRACT/GRANT NO. R 802872
12. SPONSORING AGENCY NAME AND ADDRESS Industrial Environmental Research Laboratory - Cin., OH Office of Research and Development U.S. Environmental Protection Agency Cincinnati, Ohio 45268		13. TYPE OF REPORT AND PERIOD COVERED Final
		14. SPONSORING AGENCY CODE EPA/600/12

15. SUPPLEMENTARY NOTES
Vol. II - Wastewater Characterization
Vol. III - Wastewater Treatment

16. ABSTRACT

This study has surveyed the military explosives and propellant manufacturing industry, covering both "GOGO" and "GOCO" facilities. Sources of wastewater, volumes, and pollutant constituents have been reported where such data existed.

Treatment technology currently in use at the various installations has been described, including effectiveness of pollutant removal and secondary (air and solid) waste generation. Systems under development at these military installations have also been examined and evaluated in light of available information.

The report consists of three volumes. Volume I presents general conclusions and recommendations and describes the industry's manufacturing operations. Volume II presents the bulk of the data concerning the wastewaters and the treatment systems now in place. Volume III reviews and summarizes data from the first two volumes and describes and evaluates the new treatment processes under development at this time.

17. KEY WORDS AND DOCUMENT ANALYSIS

a. DESCRIPTORS	b. IDENTIFIERS/OPEN ENDED TERMS	c. COSATI Field/Group
Wastewater Industrial wastes Explosives Waste treatment Propellants	Water pollution control Chemical wastes Military Manufacturing	13B 15B

18. DISTRIBUTION STATEMENT Public Distribution	19. SECURITY CLASS (This Report) Unclassified	21. NO. OF PAGES 106
	20. SECURITY CLASS (This page) Unclassified	22. PRICE PC A06 MF A01

EPA Form 2220-1 (9-73)

*USGPO: 1977 — 757-056/5484 Region 5-11

PB 265 385

EPA-600/2-76-213a
October 1976

Environmental Protection Technology Series

STATE-OF-THE-ART: MILITARY EXPLOSIVES AND PROPELLANTS PRODUCTION INDUSTRY

Vol. 1 - The Military Explosives and Propellants Industry

UNITED STATES ENVIRONMENTAL PROTECTION AGENCY

REPRODUCED BY
NATIONAL TECHNICAL
INFORMATION SERVICE
U. S. DEPARTMENT OF COMMERCE
SPRINGFIELD, VA. 22161

RESEARCH REPORTING SERIES

Research reports of the Office of Research and Development, U.S. Environmental Protection Agency, have been grouped into five series. These five broad categories were established to facilitate further development and application of environmental technology. Elimination of traditional grouping was consciously planned to foster technology transfer and a maximum interface in related fields. The five series are:

1. Environmental Health Effects Research
2. Environmental Protection Technology
3. Ecological Research
4. Environmental Monitoring
5. Socioeconomic Environmental Studies

This report has been assigned to the ENVIRONMENTAL PROTECTION TECHNOLOGY series. This series describes research performed to develop and demonstrate instrumentation, equipment, and methodology to repair or prevent environmental degradation from point and non-point sources of pollution. This work provides the new or improved technology required for the control and treatment of pollution sources to meet environmental quality standards.

This document is available to the public through the National Technical Information Service, Springfield, Virginia 22161.

EPA-600/2-76-213a
October 1976

STATE-OF-THE-ART MILITARY EXPLOSIVES AND PROPELLANTS PRODUCTION INDUSTRY

VOLUME I
The Military Explosives and Propellants Industry

by
James Patterson
Norman I. Shapira
John Brown
William Duckert
Jack Polson
American Defense Preparedness Association
Washington, DC 20005

Project No. 802872

Project Officer
Richard Tabakin
Industrial Environmental Research Laboratory - Cincinnati
Edison, New Jersey 08817

INDUSTRIAL ENVIRONMENTAL RESEARCH LABORATORY
OFFICE OF RESEARCH AND DEVELOPMENT
U.S. ENVIRONMENTAL PROTECTION AGENCY
CINCINNATI, OHIO 45268

DISCLAIMER

This report has been reviewed by the Industrial Environmental Research Laboratory, Cincinnati, of the U. S. Environmental Protection Agency, and approved for publication. Approval does not signify that the contents necessarily reflect the views and policies of the U. S. Environmental Protection Agency, nor does mention of trade names or commercial products constitute endorsement or recommendation for use.

FOREWORD

When energy and material resources are extracted, processed, converted, and used, the related pollutional impacts on our environment and even on our health often require that new and increasingly more efficient pollution control methods be used. The Industrial Environmental Research Laboratory - Cincinnati (IERL-Ci) assists in developing and demonstrating new and improved methodologies that will meet these needs both efficiently and economically.

This project, "State-of-the-Art: Military Explosives and Propellants Production Industry", was undertaken as part of Environmental Protection Agency's Miscellaneous Chemical Industries program to establish a baseline of information concerning the military explosives industry, the magnitude of its waste problems, and the adequacy of the industry's treatment technology. The results of the study have indicated that many of the wastes do present significant problems of toxicity and/or resistance to treatment, in addition to problems unique to explosives. Although some treatment systems in use do protect the nation's waterways from contamination, others are inadequate, generate secondary air or solid waste problems, or are not widely used due to budgetary limitations. Further research effort is needed by EPA and/or Department of Defense to control pollutants generated by certain sectors of the industry. The data and results of the investigation have been used extensively by EPA's Office of Water Programs in developing standards for the explosives industry. It will also allow engineering staffs at several commercial military manufacturing facilities to examine their wastes and compare control technology with that being used or developed at other installations. Finally, it will enable EPA to determine our own research efforts in this industry and how they would relate to other programs. Questions or requests for additional information should be directed to the Industrial Environmental Research Laboratory - Cincinnati, Field Station - Edison, New Jersey.

David G. Stephan
Director
Industrial Environmental Research Laboratory

ABSTRACT

This study, contained in three volumes, addresses the wastewater effluents of the military explosives and propellants production industry. Both manufacturing and LAP (Load, Assemble, and Pack) activities are covered. Volume I describes the industry, as well as the production processes and technology. Volume II details the wastewater effluents of manufacture and LAP operations by product, process, and military installation, to the extent that data are available. Volume III describes and evaluates the effectiveness of various treatment technologies for water pollution abatement now in use or under investigation by product, process, and military installation.

A comprehensive long-term effort has been underway by the Department of Defense for a number of years for the purpose of modernizing munitions production plants. Pollution abatement is an integral part of the modernization program. Although extensive study, research and development investigations have been undertaken, and although significant water pollution abatement and water management plans have been developed, implementation is generally in only the initial stages at selected military facilities. Major Government emphasis and very substantial funding are essential to: the continuation of necessary pollution abatement research and development; the demonstration of promising new treatment technologies; and the implementation of effective and economical treatment system construction programs. Recommendations are set forth in detail in Volume I.

TABLE OF CONTENTS

	Page
ABSTRACT	iv
ACKNOWLEDGMENTS	vi
LIST OF FIGURES, VOLUME I	viii
LIST OF TABLES, VOLUME I	ix
VOLUME I	
CHAPTER I - Summary, Conclusions, and Recommendations	2
SECTION I - Executive Summary	2
SECTION II - Conclusions and Recommendations	6
SECTION III - New Technology Investigations	15
CHAPTER II - Introduction	19
CHAPTER III - The Military Explosives and Propellants Industry	36
CHAPTER IV - Explosives and Propellants Production Technology	54
SECTION I - Manufacture of Explosives and Propellants	54
SECTION II - Manufacture of Nitrating Acids	80
SECTION III - Loading Operations	84
SECTION IV - Approaches to Water Pollution Abatement	90

ACKNOWLEDGMENTS

This study was conducted for EPA by The American Defense Preparedness Association (ADPA) under Grant No. R802872, which covered a portion of the Study expenses. The balance was contributed by ADPA and by The AdHoc Committee members. The purpose of this paragraph is to identify the principal participants and their relationships.

a. Sponsor. The study Sponsor was The Office of Research and Development of The U. S. Environmental Protection Agency. The project officer within EPA was Mr. Richard Tabakin of the Industrial Environmental Research Laboratory - Cincinnati, Field Station Edison, NJ.

b. ADPA. The American Defense Preparedness Association assembled an AdHoc Committee from the industrial and educational communities for the specific purpose of conducting this study. The Committee membership is as follows:

(1) Dr. James W. Patterson, Chairman of the Department of Environmental Engineering, Illinois Institute of Technology, Chicago, Illinois. Responsible for Chapter VI, "Wasterwater Treatment."

(2) Dr. John A. Brown, President of John Brown Associates, Berkeley Heights, New Jersey; and member of the U. S. Army Senior Scientist Steering Group for Munitions Plant Modernization and Pollution Abatement. Responsible for Chapters III and IV, "The Military Explosives and Propellant Industry" and "Explosives and Propellants Production Technology."

(3) Mr. William Duckert, WAPORA, Inc., Washington, D. C. Responsible for Chapter V, "Wastewater Characterization."

(4) Mr. Jack R. Polson, Mason and Hanger Co., Iowa Army Ammunition Plant. Special Consultant.

(5) Mr. Norman I. Shapira (Col. U. S. Army - Ret.), Consultant, Dunkirk, Maryland; ADPA AdHoc Committee

Chairman. Responsible for Chapters I-II and overall management of the study program.

c. Department of Defense. The study would not have been possible without the full cooperation of the Military Services, and their support was generously and enthusiastically provided, specifically by the following commands:

(1) Headquarters, U. S. Army Materiel Command

(2) Headquarters, U. S. Naval Material Command

(3) Office of Development and Acquisition, Headquarters, U. S. Air Force

(4) Headquarters, U. S. Army Armament Command

(5) Headquarters, U. S. Navy Sea Systems Command

(6) Manufacturing Technology Directorate, U. S. Army Picatinny Arsenal

(7) U. S. Army Environmental Hygiene Agency

This study is based substantially upon data and factual information provided by the Military Services.

d. In particular, the following persons are cited for their valuable and significant contributions:

(1) Lt. General Woodrow Vaughan, Deputy Commander, U. S. Army Materiel Command

(2) Mr. Irving Forsten, U. S. Army Picatinny Arsenal

(3) Mr. Gerald Eskelund, U. S. Army Picatinny Arsenal

(4) Mr. Thomas Wash, Headquarters, U. S. Army Armament Command

(5) Mr. Daniel Quagliarello, Headquarters, U. S. Naval Material Command

(6) Col. William Gilley, U. S. Army Environmental Hygiene Agency

LIST OF FIGURES

	Page
Figure 1 - The Military Explosives and Propellants Industry.....	21
Figure 2 - Major Explosives and Propellant Facilities in the U. S.....	38
Figure 3 - Production of Basic Explosive and Propellant Materials.....	43
Figure 4 - Production of Formulations and Blends.....	45
Figure 5 - Production of Nitration Acids.....	46
Figure 6 - Major Wastewater Problems.....	49
Figure 7 - Batch Process for TNT Manufacture.....	57
Figure 8 - CIL Continuous Process for TNT Manufacture.....	60
Figure 9 - TNT Purification CIL Continuous Process.....	61
Figure 10 - Tetryl Manufacturing Process at Joliet AAP.....	64
Figure 11 - RDX-HMX Process.....	68
Figure 12 - Batch Nitrocellulose Manufacture.....	69
Figure 13 - Biazzi Nitroglycerin Process.....	73
Figure 14 - Water Balance for Illustrative, 52,800 LB/DAY, Biazzi NG Line at Radford AAP.....	75
Figure 15 - Ball Powder Process at Badger AAP.....	78
Figure 16 - Red Water Reclamation Concept.....	91
Figure 17 - Current Water Balance, Batch NC Line.....	93
Figure 18 - Proposed Water Balance, NC Batch Line.....	94

LIST OF TABLES

Page

Table 1 - Picatinny Arsenal Pollution Abatement Project - Manufacturing Methods and Technology Engineering..... 32

Table 2 - Major Projects..... 34

Table 3 - Principal Ingredients of Explosive and Propellant Formulations..... 35

VOLUME I

THE MILITARY EXPLOSIVES AND PROPELLANTS INDUSTRY

Introduction, Summary and Conclusions

The reader of this report is advised that it consists of six chapters, contained in three volumes, each addressing separate aspects of the explosives and propellants wastewater effluents and treatment situations, and that duplication and repetition among these chapters has been kept to a minimum. Thus, the reader is cautioned that the use or interpretation of statements or evaluations taken out of context from the study in its entirety could lead to serious misunderstandings and incorrect assessments.

CHAPTER I

SUMMARY, CONCLUSIONS, AND RECOMMENDATIONS

SECTION I - EXECUTIVE SUMMARY

1. Background.

This study was conducted by the American Defense Preparedness Association (ADPA)* at the request of the Office of Research and Development of the U. S. Environmental Protection Agency.

2. Purpose.

The purposes of this study are as follows:

a. First, to define and characterize the typical wastewater effluents from military explosives and propellants production.

b. Second, to identify and evaluate explosives and propellant wastewater effluent treatment processes, including those now being used as well as those under investigation, and to reach conclusions regarding their effectiveness.

c. And finally, to suggest RD&D programs which EPA might support in order to make available to the explosives and propellants production industry the most effective and economical treatment technology for achievement of the effluent quality prescribed by the U. S. Congress.

3. Organization.

a. Volume I contains four chapters including an Introduction to The Military Explosives and Propellants Industry, as well as Conclusions and Recommendations.

b. Volume II contains only Chapter V, "The Wastewater Effluents." This chapter includes all of the monitoring and sampling data and is quite voluminous.

---

* Formerly American Ordnance Association (AOA).

c. Volume III contains only Chapter VI, "Wastewater Treatment," and is devoted to a discussion and evaluation of the treatment technologies, by product and process, and constitutes the primary basis for the conclusions and recommendations.

4. Scope of the Industry.

a. The industry is characterized by two major "activities":

(1) "Manufacture" involves production of an explosive or propellant or intermediate product from raw materials. Examples of manufacturing include TNT, nitrocellulose, nitroglycerin, nitric acid, sulphuric acid, etc.

(2) "Load, Assemble, and Pack (LAP)" involves the loading of an explosive or propellant product into a munition. It also usually involves "blending" of various ingredients in the loading process.

b. The industry produces three major categories of products: acids, explosives, and propellants. The explosives and propellants are final products, whereas the acids are intermediate products used in the manufacture of such products as TNT, NC, RDX, etc.

5. Overview of the Military Explosives/Propellants Industry.

a. The U. S. Army Profile. The Army owns 17 "Army Ammunition Plants" (AAP) engaged in explosive and/or propellant activities. One additional AAP is planned for construction in Mississippi. Seven AAPs engage only in manufacture; eight are involved only in "LAP" (Load, Assemble, and Pack) activities, which involve the mixing, blending, and loading of explosives or propellants into munitions; and two engage both in manufacture and LAP.

(1) The Army manufactures all explosives used by the U. S. Air Force, and all explosives used by the U. S. Navy with the exception of nitroglycerin, which, although an explosive, is used primarily as an ingredient of propellants.

(2) The Army also manufactures propellants such as nitrocellulose which are used by the Navy and Air Force.

(3) The Army's LAP plants not only load Army munitions, but some Air Force munitions as well.

b. The U. S. Navy Profile. The Navy operates six installations, two of which are engaged in the manufacture of explosives (nitroglycerin only) and propellants. These two facilities also engage in LAP activities. The other four Navy installations are involved only in LAP activities. The Navy manufactures propellants for their own use as well as use by the U. S. Air Force, and is a major contractor to the U. S. Air Force for loading of explosives into bombs.

c. The U. S. Air Force Profile. The Air Force owns only one plant within the scope of this study, which is engaged in loading of propellants.

6. Limitations.

This is probably the most comprehensive study which has been conducted both to characterize the wastewater effluents of the military explosives and propellants production industry and to evaluate associated wastewater treatment technology. Nevertheless, this study is limited to the degree that it is based upon available sampling and monitoring data, supplemented by on-site visits to the extent permitted by time and financial resources. No actual monitoring or sampling was done by the ADPA Committee.

7. General Conclusions.

a. The Department of Defense has displayed exemplary initiative by engaging in an intensive effort to modernize munitions production plants, including plans for extensive programs designed for the abatement of pollution. A wide range of improved treatment technologies is under investigation in research and development programs. Implementation of improved treatment systems has been undertaken, but completion of the program is, in part, dependent upon future availability of financial resources as well as the success of current and future research and development efforts, and is scheduled over a period of years. Substantial progress has been made in pollution abatement. However, because of

the magnitude of the effort and resources required, continued application of substantial funds will be necessary in the areas of:

(1) Research and development of new treatment technologies.

(2) Implementation of established treatment technologies as part of the long-term modernization program.

(3) Establishment of realistic criteria as a valid basis for measurement of pollution parameters.

(4) Establishment of standardized analytical procedures for monitoring programs.

(5) Implementation of more extensive, long-term monitoring programs in a major waste characterization effort to fill data gaps and to establish a more valid basis for evaluation of effectiveness of treatment technologies.

(6) Standardization of treatment technologies among the various plants for identical or similar products or processes.

(7) Investigation of the energy consumption implications of alternate treatment technologies.

(8) Continued implementation of water management improvement programs.

b. The U. S. Environmental Protection Agency can contribute substantially to improved pollution abatement by initiation of an Inter-Agency program to fund the demonstration of promising treatment technologies now in research and development by Department of Defense.

SECTION II - CONCLUSIONS AND RECOMMENDATIONS

8. Introduction.

a. Because conclusions and recommendations are so closely inter-related and interdependent in this study, it has been found preferable to group them together. The recommendations are the obvious consequences of the conclusions, and are clearly stated herein as actions proposed or suggested.

b. The conclusions and recommendations are based upon detailed professional evaluations of available data. Basic data are presented in Chapter V (Volume II), wherein the wastewater effluents are characterized. The evaluations of current treatment technologies, as well as technologies under investigation, are set forth in Chapter VI (Volume III). No attempt is made here in Chapter I to repeat the justifications given in Chapter VI for the conclusions and recommendations.

c. The evaluations of treatment technology presented in Chapter VI (Volume III), as well as the conclusions presented in this Chapter are based upon a wide range of data, collection conditions and analytical procedures, as well as a wide variety of data sources, many of which are incomplete, and some of which are conflicting. As a result, the conclusions and recommendations assessing the effectiveness of treatment technologies represent the best professional judgements of the authors, within the constraints and limitations of available factual data. In some instances, lack of data in published form on current investigations have precluded incorporation of adequate assessments of these investigations. Data sources are cited in detail throughout Chapters V-VI, and are listed in Appendix I, "References."*

d. It has not been possible, within the limited resources available for this study, to investigate the application of every possible treatment technology to every product or process wastewater stream in the military explosives and propellants production industry. However, all technologies currently in use or under investigation by the

*Volume III

Military, on which reports have been published, have been included and are evaluated in this study.

9. General.

a. A major program has been underway by the U. S. Army for several years to investigate and implement technologies for wastewater treatment and water management at Army ammunition plants. A similar program of limited scope has been undertaken by the U. S. Navy in a number of study and research and development efforts. However, because of the magnitude of the work remaining to be done, it is recommended that the U. S. EPA participate in future research and development programs by providing substantial funding support for the demonstration of promising new treatment technologies.

b. Several pollution abatement procedures used or under consideration by the military are significant energy consumers. Examples are red water concentration and incineration at several plants, and the proposed evaporation of pink and yellow water at Newport AAP. There is a need to develop and assess alternative, energy-conservative pollution abatement technologies.

c. Because of the unique consituents and possibly toxic nature of several process effluents of the military explosives and propellants industry, there is a need to establish a valid scientific basis for the levels of control required for individual constituents. Furthermore, such constituents as may require control should be regulated and monitored as specific parameters (such as TNT, NC, or RDX) rather than as general, non-specific parameters such as BOD or COD. This is recommended as the subject of a major new effort.

d. Although substantial progress has been made by the U. S. AEHA, U. S. Army Edgewood Arsenal, and U. S. NSWL, White Oak, a major, coordinated program should be initiated for the establishment of standardized analytical procedures and monitoring criteria for the production of statistically significant data which are needed for the proper characterization of wastewater effluents.

e. Many product and process effluent streams are not adequately characterized with respect to waste constituents,

constituent concentrations, or effluent volumes. Identification of effective treatment technology requires individual process effluent characterization, rather than monitoring of combined waste flows. A major new waste characterization effort should be undertaken to establish a more comprehensive basis for the selection of future treatment technologies.

f. Because of major variations in the types and amount of products manufactured from month to month and year to year, no brief or superficial monitoring program will provide adequate waste characterization information. Comprehensive, long-term monitoring programs are required both to establish reliable waste characteristics and to assess the effectiveness of current and future pollution abatement programs.

g. The wide variation of proposed treatment processes among various plants with identical products and similar waste streams reflects the lack of establishment of industry-wide pollution abatement standards. This diversity is exemplified by the rigorous treatment proposed for nitric acid wastes at Radford AAP and Volunteer AAP, as compared to the plans for simple pH adjustment at Badger and Newport AAPs. Pollution abatement criteria for specific products and processes should be unified and standardized for the explosives and propellants industry as a whole.

h. The combining of contaminated process wastewater with non-contact or other non-contaminated discharges has been a widespread practice. Combined wastewater adversely impacts both on effective and on economic pollution abatement. A major program of effluent segregation, such as has been implemented at Radford AAP for NC, is recommended.

i. The use of evaporation/percolation ponds represents an economical and effective disposal method for some explosive and propellant wastes. In the semi-arid regions of the West and Southwest, the use of pits and lagoons by the U. S. Navy is quite effective. However, in other areas, such systems must properly balance seasonal rainfall and evaporation against process waste volumes.

j. The potential for soil and groundwater contamination from percolation basins may be significant, and monitoring studies are recommended to establish design and

operating criteria for ponds and lagoons. In instances where percolation might result in unacceptable pollution of ground or near-surface waters, sealed ponds or alternate disposal methods are indicated.

k. There are numerous proposals for the application of biological waste treatment in the explosives and propellants industry. In some instances, the proposed application is for a wastewater containing constituents, such as phosphate, which are not amenable to biological treatment. Furthermore, serious questions concerning possible biotransformation of wastewater constituents, and the environmental impact of treatment by-products, remain unanswered. Pending further study of these issues, caution should be used in the adoption of biological waste treatment processes for specific wastewaters of the explosives and propellant industry.

l. Demilitarization represents a separate and distinct activity of the military explosives and propellants industry, as well as a substantial contributor of wastewater effluents and air pollution. It is not covered in this report, and should be the subject of a separate study.

10. Data Gaps.

a. In the characterization of the effluents from the military explosives and propellant production and LAP processes, there are major data gaps in several areas for the Army; and essentially no statistically meaningful data are yet available for the Navy.

b. Waste characterization data for propellant products are generally deficient.

c. Characteristics are generally not available for pink water wastes from secondary sources, such as red water evaporation condensate.

d. Essentially no waste characterization data are available for several minor LAP operations and products.

11. TNT.

a. Insufficient attention appears to have been directed toward optimization of activated carbon treatment of pink water, despite evidence that both avoidance of color development and maintaining acidic pH enhance treatment efficiency. In the light of the widespread proposed use of carbon, studies to better define process design and operating criteria are recommended.

b. The current practices of use of carbon to exhaustion, and incineration of spent carbon, are uneconomical and represent a potential for air pollution. Intensive studies on carbon regeneration are recommended. Both thermal and solvent regeneration technologies appear promising, although thermal regeneration apparently imposes a restriction on the percent of carbon adsorption capacity available and also represents a potential air pollution problem.

c. In the absence of economic carbon regeneration techniques for pink water carbon systems, the potential for use of polymeric resin adsorption or the combination of resin plus carbon systems appears to have the advantages of good regeneration capability for the resin and reduction in carbon consumption.

d. While attractive from the economic standpoint, biological treatment of pink water must be considered with caution. Points of concern include: the need for large quantities of supplemental nutrient; pollutant biotransformations; and the nature and potential impact of treatment by-products on the receiving environment, or the need for application of supplementing polishing steps such as carbon treatment and resin adsorption.

12. Acids.

a. Significant opportunities exist within the acid manufacturing facilities for reduction in waste volumes, water reuse, and similar water management efforts. One example is the potential use of NAC effluent at Holston AAP as a water source for nitric acid production and NO_x abatement.

b. The results of current control of red water by evaporation/incineration are: a pink water condensate

requiring further treatment; a high energy demand; the production of air pollutants; and land disposal of large quantities of ash. Among available alternatives, the Tampella process for reclamation of the inorganics, and UV-catalyzed ozonation to destroy dissolved TNT hold sufficient promise to warrant further study. In addition, investigation of new treatment processes for red water is recommended to supplement current studies on existing techniques.

c. Effective pH control of wastes from acid manufacture and use has not yet been fully implemented by the military. The technology for pH control is well established, and efforts should be made to implement effective control procedures.

d. Plans to biologically treat wastewater from acetic acid and anhydride manufacture will not be acceptable if preliminary evidence of the presence of toxic constituents and biorefractory organics is valid. Pending identification of the extent of toxicity or resistance to degradation, consideration of separate non-biological treatment is indicated. Projected treatment of nitrate and sulfate wastewaters by aerobic biological processes such as is proposed at Holston AAP for acid area wastes is questionable, in the light of the lack of demonstrated effectiveness of biological treatment in abating these waste constituents.

e. Where sulfate control is sought through addition of lime and precipitation of gypsum, treatment should be directed to the most concentrated (in sulfate) waste streams prior to their dilution by flows low in sulfate.

f. A more intensified effort is warranted for nitrate control, in light of successful pilot studies carried out by both the military and other industries. These studies have established design and operation criteria, which can be implemented for full-scale treatment.

g. Applicable processes for nitrate control include biological denitrification and ion exchange. The suspended growth columnar denitrification process appears promising among biological processes, and the "Chem-Seps" process has potential application for ion exchange control. These should be investigated further.

13. Nitrocellulose.

a. An abatement effort is recommended for NC production at Badger AAP comparable to the successful programs which have been implemented at Radford AAP.

b. Significant progress has been made in reducing wastewater volumes and pollutant discharges from NC manufacture. Based upon programs implemented at Radford AAP, it appears that wastewater resulting from NC manufacture can be totally controlled with available technology.

c. Capability for sulfate control is limited either to precipitation (as the calcium or barium salt), or to non-selective processes such as ion exchange deionization. If sulfate control is required in the explosives industry, improved economical processes are needed. Further research and development on sulfate control is recommended.

14. RDX/HMX.

a. Current, proven technology for RDX and HMX control is limited to carbon adsorption, with polymeric resin adsorption now showing some promise. Carbon treatment without the capability for regeneration has similar disadvantages to those encountered in carbon treatment of pink water. Investigation of alternate techniques for treatment of RDX and HMX is recommended.

b. Current treatment practice for RDX and HMX effluents is limited to carbon treatment of LAP wastewaters at Joliet AAP. Carbon treatment appears effective to a degree, although the preferential sorption of TNT indicates that the design capacity of carbon systems intended to remove TNT in addition to RDX or HMX from wastewaters must be optimized for RDX or HMX removal. This may result in overdesign of the system relative to TNT control.

c. Adsorption of RDX or HMX on polymeric resin is a promising technique, with potential opportunity for resin regeneration through alkaline hydrolysis of the explosive upon the resin. Further study of the polymeric resin system is recommended.

d. The proposal of Holston AAP to biologically treat wastewater from RDX and HMX manufacture is questionable, in light of prior failure to show effective biodegradation, and because of uncertainties concerning biotransformation and potential environmental impact of treatment by-products.

15. Nitroglycerin.

a. The water management program proposed for Radford AAP for nitroglycerin wastewaters should be considered for implementation at Badger AAP and at NOS Indianhead.

b. Biological treatment of high NG wastewaters does not appear feasible without dilution or pretreatment for NG removal, and is not expected to control the high nitrate and sulfate and alkalinity levels of the wastewaters.

c. Other than evaporative ponds, the only effective treatment for NG wastewaters is the sulfide decomposition process, and this has several undesirable side effects. Therefore, a new program of research and development should be undertaken to explore and assess alternative processes both for decomposition and for recovery of NG (and DNG). Such a program would be of value both to the military and commercial explosives industries.

16. Sellite.

Longer aeration periods and additional mechanical aeration capacity are needed for adequate sulfite treatment of effluents from the sellite process at Joliet AAP.

17. Propellants.

a. Wastewaters associated with solvent propellant manufacture are generally not treated prior to discharge, except for some pH adjustment. There is significant opportunity for water management to reduce water use, and achieve product recovery by recycling.

b. The water management program implemented at Badger AAP for reduction of process waste volume, and use of percolation/evaporation ponds for solventless propellant wastewater, should be considered for application at Radford AAP and NOS Indianhead.

c. Propellant conveyance water used in the solvent process of propellant production is relatively uncontaminated. Recycle of this water should be considered.

d. "Water-dry" wastewater used in the solvent process of propellant production should be recycled as part of the water management program, in conjunction with solvent recovery from the "water-dry" waste by distillation.

e. The wet screening water used in the manufacture of ball powder should be recycled as part of a water management program to reduce such wastewater by as much as 50 percent.

f. Ion exchange should be investigated for the treatment of lead-bearing wastewaters from the slurry mix of solventless propellant production.

g. Still bottoms from solvent propellant manufacture may be blended with solvent wastes, with the combined flow treated by activated carbon.

18. LAP.

a. One source of wastewater at many manufacturing and LAP facilities is air pollution control scrubber water. Dry collection and control techniques such as used at AF Plant #78, NAD Hawthorne and NWS Yorktown both avoid generation of liquid waste and provide the opportunity for product recovery. The applicability of dry particulate control should be assessed for other plants.

b. Completely enclosed, forced air conveyance systems for the transport of powdered materials such as ammonium perchlorate result in avoidance of the need for building and equipment washdown and eliminate water pollution. Examples of such systems are at the Aerojet plant in Sacramento, and at Redstone Arsenal in Alabama. Air can be recirculated, or processed through dry collectors.

SECTION III - NEW TECHNOLOGY INVESTIGATIONS

19. Introduction.

In addition to the established and developmental wastewater treatment technologies which have been evaluated in detail in this study, there are a number of experimental technologies which merit consideration for possible inclusion in future RD&D programs. The following list is not exhaustive, but it highlights a number of new approaches which have surfaced in this study.

20. Cross-Flow Filtration.

A new class of filter elements consisting of microporous permeation tubes approximately one-quarter to one-half inch in diameter is under development. Suspensions to be filtered are pumped through these tubes at pressures varying from 15-40 psi and at velocities of approximately 15 feet per second; clear liquid permeates through the porous walls, and a concentrated slurry is produced. The high slurry velocity and the turbulence of the flow keeps the inner walls of the tubes scoured clean, and there is normally little or no plugging of the pores. Suspended solids are removed nearly quantitatively from primary sewage, fine fibers and suspended solids are removed virtually quantitatively from a variety of industrial wastewaters, and at least some oil-water emulsions are efficiently separated. Different developers offer these tubes in stainless steel, heavy-wall polymer and membrane form. Filters such as these are suggested for investigation for operations where conventional filtration, centrifugation or settling basins are not quite adequate.

21. Evaporative Dewatering.

There is a well-established, energy-conservative, evaporative dewatering process which may offer better and lower-cost disposal of streams such as red water. In this process, an oil phase is added to the slurry or solution to be dewatered, and the mixture is passed through a heat exchanger and several effects of falling film evaporators. The oil serves to reduce the viscosity, to carry the

precipitated solids and to prevent fouling and caking on the heat exchanger surfaces. The water is taken overhead, and the solids are taken out the bottom of the last effect as a now-anhydrous slurry in oil. The oil is centrifuged off and recycled to the feed tank, and the solids can either be burned for process heat or recovered for reuse or sale. The condensed water is free of non-volatiles and is suitable for reuse or discharge with only minimal polishing treatment. If the initial feed contains as much as 4.2% of non-volatiles of 10,000 BTU/lb fuel value or better, an industrial-scale unit can be self-sustaining and needs no external source of process heat.

22. Catalyzed Ozonation.

It has recently been shown by a number of investigators that ozone will readily oxidize normally refractory wastewater constituents such as TNT and RDX if the ozone is sparged into the wastewater in the presence of ultra-violet radiation. Army Surgeon General sponsored studies have shown that other refractory materials are also destroyed. The economics have not yet been established, because the process parameters have not yet been optimized; but UV-catalyzed ozonation should be investigated for polishing such dilute effluents as pink water, RDX waters, and the condensate from red water concentration.

23. Reverse Osmosis.

a. Reverse osmosis has frequently proved disappointing in attempted industrial applications, perhaps because insufficient research has been devoted to improved membranes. There are a number of greatly improved membranes in the developmental stage in various laboratories, including one (polybenzimidazole) which withstands chromic acid, free chlorine, strong nitric acid, strong caustic and temperatures up to at least 75°C. In view of the many attractive wastewater treatment processes which really good RO membranes would make possible, a significant, government-supported, membrane research and development effort is recommended.

b. In addition to fragility of current membranes, a second limitation of RO processes for industrial applications is the rapid rise of osmotic pressure with solute concentrations, so that the concentration of aqueous solutions to more

than about 3 - 5% has generally not been feasible. Given improved membranes, this limitation could be circumvented by the use of countercurrent flow; and solute concentrations could be raised to the saturation level. There are of course engineering problems involved, and a significant research and development effort is needed.

24. Powdered Activated Carbon.

The only really serious drawback to the use of activated carbon for polishing wastewater streams such as pink water is economic. Up to now at least, regeneration of spent carbon beds has failed to restore adequate capacity at supportable cost, and once-through use is too expensive. However, all past work has been with granular carbon, and the much cheaper powdered carbon may offer an attractive alternative. The Jet Propulsion Laboratory has recently demonstrated the economic use of powdered carbon for treatment of municipal sanitary sewage, on a 10,000 gallon per day scale, adding the powdered carbon directly to the incoming raw sewage as a filter aid, in two stages, producing effluent intermediate in quality between conventional secondary and conventional tertiary effluent. The spent, organic-laden carbon is pyrolyzed to make new powdered carbon for recycle to the feed tank. Alternatively, the sludge-laden carbon could be burned for fuel. The JPL investigations, supported by EPA, are continuing and should be followed closely for possible applicability to AAP wastewater streams. Note that this process would readily combine with on-site sanitary sludge disposal problems and with the evaporative dewatering process described above.

25. Wastewater Extraction.

a. Once water management improvements have reduced contaminated wastewater flows to minimum-volume, maximum-concentration streams, it may become practical to extract them in countercurrent fashion with plant fuel oil. Soluble organics would pass into the oil phase to be destroyed in the plant's power furnaces where their small NO_x, etc., contributions would be lost in that already in the stack gas. The effluent water stream would be saturated with hydrocarbon oil; but oil - unlike such species as TNT and RDX - is readily biodegradable by conventional, well-accepted treatment without any problems of "biotransformation" to possibly toxic species.

b. A similar result, with perhaps fewer complications, could be achieved by filtering the raw wastewater through beds of crushed coal destined for the plants' power furnaces. Coal is mostly organic in composition, and the Army's Construction Engineering Research Lab has reported preliminary success in removing TNT from water in this fashion.

26. Ion Exchange.

Ion exchange is being investigated by the U. S. Navy for treatment of several AAP wastewater streams, but its full potential is not yet being exploited in such areas as RDX/HMX removal. For example, there are a number of anion exchange resins - some commercial and some experimental - which, when in the hydroxide form, hydrolize RDX/HMX to products such as nitrite, ammonia, etc., which are then adsorbed on the column, so that the effluent no longer contains RDX or its hydrolysis products. The adsorbed compounds can be purged during regeneration, with no loss of active resin sites. An extensive research and development program is recommended for investigation of resin applications.

CHAPTER II

INTRODUCTION

27. Background.

This study was conducted by the American Defense Preparedness Association (ADPA)* at the request of the Office of Research and Development of the U. S. Environmental Protection Agency. The American Defense Preparedness Association is a national association of individuals and industry whose primary interest is the defense preparedness of the United States. It is a non-profit, non-political organization which strives to improve the efficiency of science-industry-Government relationships. This study is one of many which ADPA has conducted for the U. S. Government. The study was initiated in December 1973, and completed in October 1975.

28. Purpose.

The purposes of this study are as follows:

a. First, to define and characterize the typical wastewater effluents from explosives and propellants production. This has been done primarily by the assembly and collation of data already available within the Military Services.

b. Second, to identify explosives and propellant wastewater effluent treatment processes, including those now being used as well as those under investigation.

c. Third, to compare the above mentioned wastewater effluent treatment processes with other treatment technologies available or under development, and evaluate their effectiveness.

d. And fourth, to define RD&D programs which EPA might support in order to make available to the explosives and

---

*Formerly American Ordnance Association (AOA).

propellants production industry the most effective and economical treatment technology for achievement of the effluent quality prescribed by the U. S. Congress.

29. Scope.

The scope of the study can be defined in terms of:

- o Military organizations,
- o Military products,
- o Military processes,
- o Effluents, and
- o Treatment technology.

The military organizations, products, and processes are tabulated in Figure 1.

a. The organizations encompassed in this study include: the U. S. Army; the U. S. Navy; and the U. S. Air Force. From Figure 1, it can be seen that seventeen U. S. Army Ammunition Plants (AAP) are included, as well as six U. S. Navy installations and three U. S. Air Force plants. These include all of the military facilities engaged in the production and loading of military explosives and propellants.

b. The products and processes in the military explosives and propellants industry are also listed in Figure 1, together with principal ingredients used in formulations. Figure 1 lists "Product Capabilities." This terminology was selected deliberately, since the activities of any specific military installation vary significantly from time to time in terms of both product and quantity, depending upon the production demands of the Department of Defense.

(1) The industry is characterized by two major "activities":

(a) "Manufacture" involves production of an explosive or propellant or intermediate product from raw materials. Examples

	Activity					Product Capabilities																				Ingredients Used in Formulations																
	MFRE			LAP		Acids						Explosives								Propellants																						
	Acid	Expl.	Prop.	Expl.	Prop.	Acetic Anhydride	Glacial Acetic Acid	Conc. Nitric Acid	Weak Nitric Acid	Conc. Sulphuric Acid	Oleum	DNT	TNT	NG	Tetryl	RDX	HMX	NGu	Primers	NC	Single Base	Multi-Base	Solventless	Composite	Dry Assembly	Al	AP	$CaCl_2$	DNT	HMX	NC	NG	NGu	NH_4NO_3	Ammonium Picrate	Polybutadiene	Polyurethane	RDX	Solvents	TNT	Wax	$NaNO_3$
Army Ammunition Plants																																										
Badger	x	x	x					x	x	x	x			x						x	x	x	x						x													
Cornhusker				x																																						
Holston	x	x				x	x	x	x							x	x													x				x				x		x	x	
Iowa				x															x							x				x								x		x	x	
Indiana	x		x					x	x	x										x	x																					
Joliet	x	x		x				x	x	x	x	x	x		x				x							x												x		x		
Kansas				x																						x												x		x		
Louisiana				x																																		x		x	x	
Lake City		x		x															x																							
Longhorn					x																					x	x									x						x
Lone Star				x																						x												x		x		
Milan				x																						x												x		x		
Newport	x	x						x	x	x			x																													
Radford	x	x	x					x	x	x	x		x	x						x	x	x	x	x									x									
Redstone					x																			x		x	x									x			x			
Sunflower								x	x	x										x	x	x	x																			
Volunteer	x	x						x	x	x	x		x																													
Navy Ammunition Plants																																										
NAD Crane				x																						x				x				x	x			x		x	x	x
NAD Hawthorne				x																						x												x		x	x	
NOS Indianhead		x	x		x									x								x	x	x		x	x			x	x	x	x			x	x	x	x			
NAD Mc Alester				x																						x								x				x		x	x	
NIROP Magna		x		x	x									x										x		x	x			x	x	x					x		x			
NWS Yorktown				x																						x		x										x		x	x	
Air Force Ammunition Plants																																										
Plant 44																									x																	
Plant 77																									x																	
Plant 78					x																			x		x	x			x	x	x				x			x			x

Figure 1 - The Military Explosives and Propellants Industry

of manufacturing include TNT, nitrocellulose, nitroglycerin, nitric acid, sulphuric acid, etc.

(b) "Load, Assemble, and Pack (LAP)" involves the loading of an explosive or propellant product into a munition. It also usually involves "blending" of various ingredients in the loading process.

(2) The industry produces three major categories of products: acids, explosives, and propellants. The explosives and propellants are final products, whereas the acids are intermediate products used in the manufacture of such products as TNT, NC, RDX, etc. The principal products in each category are described in more detail in Chapters III and IV. The category in Figure 1 entitled "Dry Assembly" refers to the assembly of finished rocket motors and warheads, together with cases, electronics, etc., into finished munitions. Dry assembly involves no wastewater effluents.

c. The effluents considered in this study include both those from manufacturing operations and from LAP operations. The effluents are discussed in detail, by product or process, in Chapter V, and the effectiveness of their treatment is evaluated in Chapter VI.

30. Limitations and Exclusions.

a. Exclusions. Specifically excluded from the scope of this study are the following:

(1) Metal parts used in munitions,

(2) Toxic chemical agents,

(3) Herbicides,

(4) Illuminants and incendiaries,

(5) Liquid propellants, which are primarily used in non-military roles, such as NASA space activities, and which are primarily manufactured by civilian industry rather than in military facilities, and

(6) Demilitarization of obsolete or defective military munitions.

b. Limitations. This is probably the most comprehensive study which has been conducted both to characterize the wastewater effluents of the military explosives and propellants production industry and to evaluate associated wastewater treatment technology. Nevertheless, this study is limited to the degree that it is based upon available sampling and monitoring data, supplemented by on-site visits to the extent permitted by time and financial resources. No actual monitoring or sampling was done by the ADPA Committee.

(1) Available data for AAPs come primarily from the U. S. Army Environmental Hygiene Agency (AEHA), and are derived from sampling and monitoring programs usually of weeks to months in duration.

(2) Essentially no statistically meaningful data are available from the U. S. Navy, which has only recently initiated sampling and monitoring programs. However, the Navy manufacturing and LAP processes are sufficiently similar to those used at AAPs in most cases, that one can validly attribute to the Navy comparable effluents to those generated at AAPs.

(3) The U. S. Air Force owns only one installation involved with LAP operations, and no explosive/propellant manufacturing facilities. As will be shown later, there is no wastewater discharge from this installation.

(4) It is believed that available data are sufficient in scope and detail to be valid and representative of all major products and processes, although certainly not representative of every military facility, since there are sometimes significant variations in product mix, production volume, effluents and treatment technology from one plant to another.

(5) Because of the significant variations in type products and in production volumes from month to month, and from year to year, it is clear that no brief or superficial sampling program can provide valid, representative, and meaningful data.

31. Methodology.

The methodology used in this study is relatively simple and straightforward, and involves the identification, collection, collation, analysis, and evaluation of data on the effluents and wastewater treatment technology associated with the production and LAP operations in the military explosives and propellants industry. The data are derived from published reports and studies, and from observations made through on-site plant visits.

a. Tasks. The approach is summarized in the following tasks which constitute the scope of work of this study:

(1) Task I. Identification of existing data on: explosives/propellants production wastewater effluents; explosives/propellants production wastewater treatment methods.

(a) Identification of existing data.

(b) Collection of existing data.

(c) Evaluation of adequacy of existing data.

(2) Task II. Determination of types and categories of basic data needed on: explosives/propellant production wastewater effluents; explosives/propellants production wastewater treatment methods.

(3) Task III. Determination and identification of additional data needed by evaluation and comparison of results of Task I with the results of Task II.

(4) Task IV. Collection of additional data by visits to selected production facilities.

(5) Task V. Collation of all data collected.

(6) Task VI. Evaluation of effectiveness of present wastewater effluent treatment methods, and comparison of present treatment methods with other wastewater treatment technology available or under development.

(a) Evaluation of effectiveness of present treatment processes.

(b) Collection of data on other wastewater treatment methods.

(c) Comparison of other treatment technology with present treatment processes, and determination of potential for application to the explosives/propellants production industry.

(7) Task VII. Preparation of conclusions, and recommendations for EPA RD&D programs for improved treatment of explosives/propellants production wastewater effluents.

(8) Task VIII. Final report.

b. References. The reports and studies used in this program are listed in the Appendix to Volume III. Over 230 references were collected and evaluated.

c. Plant Visits. Visits were made by the Committee to the following military installations for the following purposes: to observe manufacturing and LAP operations at first hand; to visit facilities used for the treatment or disposal of wastewater effluents; to be briefed on modernization and pollution abatement programs; and, to discuss research programs for the development of new treatment methods.

Installation	Operator	Location
Air Force Headquarters	-	Washington, D. C.
Air Force Logistics Command	-	Dayton, Ohio
Air Force Plant 44	Hughes	Tucson, Arizona
Air Force Plant 77	Boeing	Odgen, Utah
Air Force Plant 78	Thiokol	Brigham City, Utah
Army Environmental Hygiene Agency	-	Edgewood, Maryland
Army Materiel Command	-	Washington, D. C.
Edgewood Arsenal	-	Edgewood, Maryland

Installation	Operator	Location
Hill Air Force Base	-	Ogden, Utah
Holston AAP	Holston Defense Corp.	Kingsport, Tennessee
Joliet AAP	Uniroyal	Joliet, Illinois
Longhorn AAP	Thiokol	Marshall, Texas
Naval Sea Systems Command	-	Washington, D. C.
NAD Crane	Navy	Crane, Indiana
NAD McAlester	Navy	McAlester, Oklahoma
NAD Hawthorne	Navy	Hawthorne, Nevada
NIROP Magna	Hercules	Magna, Utah
NSWC White Oak	Navy	White Oak, Maryland
NOS Indianhead	Navy	Indianhead, Maryland
NWC China Lake	Navy	China Lake, California
NWS Yorktown	Navy	Yorktown, Virginia
Picatinny Arsenal	-	Dover, New Jersey
Radford AAP	Hercules	Radford, Virginia
Redstone Arsenal	Thiokol	Huntsville, Alabama

32. Report Organization.

Because of the size of this study, it is organized into three volumes, as shown in the table of contents.

a. Volume I contains the first four chapters: "Executive Summary, Conclusions, and Recommendations"; "Introduction"; "The Military Explosives and Propellants Industry"; and "Explosives and Propellants Production Technology."

b. Volume II contains only Chapter V, "The Wastewater Effluents." This chapter includes all of the monitoring and sampling data, and is quite voluminous.

c. Volume III contains only Chapter VI, "Wastewater Treatment," and is devoted to a discussion and evaluation of the treatment technologies, by product and process, and

constitutes the primary basis for the conclusions and recommendations.

d. A certain amount of duplication is deliberately incorporated into the various chapters to provide for continuity and clarity, as well as for a certain degree of integrity in each chapter.

33. Overview of the Military Explosives/Propellants Industry

a. The U. S. Army Profile. The Army owns 17 "Army Ammunition Plants" (AAP) engaged in explosive and/or propellant activities. One additional AAP is planned for construction in Mississippi. Seven AAPs engage only in manufacture; eight are involved only in "LAP" (Load, Assemble, and Pack) activities, which involve the mixing, blending, and loading of explosives or propellants into munitions; and two engage both in manufacture and LAP. Figure 1 lists also the principal ingredients used in LAP activities, as well as the explosives or propellants manufactured at each AAP.

(1) The Army manufactures all explosives used by the U. S. Air Force, and all explosives used by the U. S. Navy with the exception of nitroglycerin, which, although an explosive, is used primarily as an ingredient of propellants.

(2) The Army also manufactures propellants such as nitrocellulose which are used by the Navy and Air Force.

(3) The Army's LAP plants not only load Army munitions, but some Air Force munitions as well.

(4) All of the AAPs listed in Figure 1 are "GOCO" plants - Government-Owned, Contractor-Operated.

(5) All acid manufacture by the military is made at Army AAPs, although both the Army and the Navy also use acids procured from civilian industry, as well.

b. The U. S. Navy Profile. The Navy operates six installations, two of which are engaged in the manufacture of explosives (nitroglycerin only) and propellants. These two facilities also engage in LAP activities. The other four Navy installations are involved only in LAP activities.

(1) The Navy manufactures propellants for their own use as well as use by the U. S. Air Force, and is a major contractor to the U. S. Air Force for loading of explosives into bombs.

(2) All Navy facilities listed in Figure 1 are "GOGO" plants - Government-Owned, Government-Operated.

(3) All explosives used by the Navy are manufactured by the U. S. Army (except for NG).

c. The U. S. Air Force Profile. The Air Force owns only one plant within the scope of this study. This plant, AF Plant 78, is operated by Thiokol in Utah, and is engaged in loading of propellants. The other two Air Force plants listed in Figure 1, Plants 44 and 77, are typical of "dry assembly" activities. They assemble finished missiles, including rocket motors, cases, electronics, fuzes, etc. There are no explosive or propellant wastewater effluents associated with their activities.

d. Private Industry. In addition to operating Army Ammunition Plants, private industrial contractors also manufacture rocket motors which are used in military munitions, as well as some explosives and numerous ingredients which are used by the military. For example, Aerojet manufactures the first stage Polaris motor at a company-owned facility. DNT, nitroguanidine and ammonium perchlorate are manufactured in private industrial plants for use by military installations.

e. Munitions Plant Modernization and Pollution Abatement Programs. In recent years within the Army and Navy, two fundamental factors have begun to have an impact on the Army and Navy installations producing and loading explosives and propellants. The first factor is the age (and obsolescence) of the plants (thirty-plus years), and the consequent need for modernization. The second factor is the onset of action deadlines as a consequence of pollution-control legislation. These two considerations have resulted in the development, and initial implementation, both in the Army and Navy, of Munition Plant Modernization and Pollution Abatement Programs, which integrate:

Pollution Abatement

New Plant Construction

New Production Processes

Plant Modernization

Safety Measures

Water Management

Product Recovery

Waste Treatment Research and Development

(1) Army. The Army programs are entitled: "Munitions Production Base Modernization and Expansion" and "Pollution Abatement Engineering Program for Munition Plant Modernization." Table 1 lists the principal Army programs which are oriented toward pollution abatement. These programs are administered by the Manufacturing Technology Directorate of Picatinny Arsenal. Additional research and development programs are supported by the AMC Environmental Technology Office at Edgewood Arsenal. Table 2 lists modernization projects each with a value of $1 million or more, extending through 1981. The latter is a $7 billion program, of which $192.5 million have been funded in FY 1975 alone. At Radford AAP alone, $25 million were funded for water pollution abatement through FY 1973. The degree to which this program will continue to be implemented will depend, partly, on success of research and development programs, and substantially on Congressional appropriations in future years. Clearly, this has been, thus far, a significant program of major proportions.

(2) Navy. The Navy program is entitled: "Modernization of Naval Ordnance Field Activities." This program is essentially still in the planning stage, with no substantial implementation thus far, except for studies, design engineering, etc. The basic study was initiated in November 1972 and completed in March 1974. This is estimated to be a $106 million program, and includes five of the six Navy installations involved in explosive/propellant manufacturing and LAP.

(3) Air Force. No program exists within the Air Force comparable to those in the Army and Navy, since the Air Force essentially has no water pollution abatement problems resulting from explosives and propellants.

(4) Army versus Navy versus Air Force. Among the three services, the Army is the major producer of wastewater effluents from explosives manufacture and LAP activities. The Navy is responsible for a much smaller, but still significant quantity and variety of effluents, and essentially none are attributable to the Air Force.

(5) PL 92-500. Significant impetus has been added to the military pollution abatement programs as a result of the enactment of public law 92-500, the Federal Water Pollution Control Act Amendments of 1972.

f. Demilitarization. This is a subject which is not addressed in this study. Demilitarization frequently involves large quantities of wastewater and air contaminants, since much demilitarization of obsolete munitions involves the removal of propellants or explosives by water under high pressure or as steam as well as incineration. Large volumes of water are used, and the wastewater is saturated with a variety of effluents. Because of the magnitude of this activity, it should be the subject of a separate study.

g. Variations in Topography and Climate. Methods of treatment and disposal of wastewater effluents are influenced substantially by topography and climate. In the semi-arid regions of the West and Southwest, with annual evaporation rates of 50 or more inches of water, the use of pits, ponds, and lagoons is fully effective for disposal of wastewater effluents, since the water is lost by evaporation and percolation and the sludge is readily disposed of by burning or detonation. There is no evidence of ground water contamination, and drinking water comes from reservoirs or wells at substantial distances from the effluent disposal sites. In the Central and Eastern parts of the country, which are characterized by high rainfall, low evaporation, and close proximity of public waterways, much more severe requirements exist for treatment and management of the wastewater streams so as to remove pollutants prior to release into main outfalls.

(1) Three plants are located in the West and Southwest, as follows:

NAD Hawthorne, Nevada

NIROP Magna, Utah

AF Plant 78, Brigham City, Utah

(2) All other plants are located in areas of moderate to substantial rainfall, and usually with outfalls emptying into public waterways. Complete containment of effluent streams within the military installation may be possible, but usually not. An example where effective containment has been achieved by use of holding lagoons is NAD McAlester, Oklahoma.

h. Effluents versus Pollutants. The effluents considered in this study include both those from manufacturing operations and from LAP operations. They include such things as: acid water; "red water"; "pink water"; dissolved explosives; inorganic chemicals such as nitrates, sulphates, etc.; organic chemicals such as solvents, polymers; and suspended and dissolved solids. The word "effluent" is not identical with "pollutant." Depending upon treatment and disposal methods, as well as discharge limits, effluents may or may not constitute pollutants. Certainly, effluents are potential pollutants. For example, the effluents from NG manufacture with the Biazzi process in the arid region of Magna, Utah, are not pollutants; whereas the effluents from the same process in the humid region of Indianhead, Maryland are potential pollutants. Pink water from LAP operations at NAD McAlester, Oklahoma, is safely disposed of in lagoons without treatment. Pink water from LAP operations at Joliet AAP must undergo carbon-column treatment prior to release to the outfall.

i. Formulations. For convenience, the major explosive and propellant formulations and their principal ingredients are listed in Table 3.

TABLE 1

PICATINNY ARSENAL POLLUTION ABATEMENT
PROJECT - MANUFACTURING METHODS AND TECHNOLOGY ENGINEERING

	TASK	APPROVED		PLANNED
		FY-75	FY-76	FY-77/80
TECHNOLOGY INVESTIGATIONS				
Bomb Wash-Out Water Treatment	2	COMPLETED - 4/70		
Sellite Waste Treatment	3	COMPLETED - 12/72		
Treatment of Nitrobody Wastes from TNT Production	9	x		
Disposal of Wastes from Propellant Manufacture	10	x	x	x
Elimination of Sulfate Wastes	11	x		
Elimination of Organic Solvent Wastes	12		x	x
Pollution Abatement in Processing Metal Parts for Ammunition	14	TRANSFERRED TO FRANKFORD ARS		
Improved Treatment of Waste Materials from Primer Mix Plants	15	TRANSFERRED TO FRANKFORD ARS		
Water Management	16	x	x	x
Utilization of Waste Energetic Materials	18	Now an R&D program, not MM T		
Regeneration of Activated Carbon Contaminated with Explosives	22	x	x	x
Removal Techniques for Soluble RDX and HMX	24		x	x
Hazards Analysis of Pollution Abatement Techniques	25	x	x	x
SO_X Abatement Methods	26	x	x	
Solid Waste Soil Disposal Techniques	27	x	x	x
Removal of Small Quantities of Ammonia in Streams	28			
Pollution Control in Loading of Explosives Containing Ammonium Nitrate, Aluminum, RDX and TNT	29	x		
Decontamination and Elimination of Bulk Materials	30		x	x

TABLE 1 (Continued)

PICATINNY ARSENAL POLLUTION ABATEMENT
PROJECT - MANUFACTURING METHODS AND TECHNOLOGY ENGINEERING

	TASK	APPROVED		PLANNED
		FY-75	FY-76	FY-77/80
INSTRUMENTATION AND MONITORING				
Methods and Equipment to Measure, Monitor, and Control Pollutants	19	x	x	x
PILOT PLANT DEMONSTRATIONS				
NO_X Abatement Methods	4	x	x	x
Explosive Contaminated Inert Waste Disposal	5	COMPLETED - 12/72		
Explosive and Propellant Waste Incineration	6	x	x	x
Elimination of Nitrate Wastes	7	x	x	
Disposal of Red Water from TNT Purification	8	x	x	
Elimination of Phosphate Wastes from Cooling Water and Boiler Blow-Down Effluents	17	SCHEDULED COMPLETION 7/74		
Disposal of Lead Azide	20	x		
Disposal of Methyl Nitrate from HMX and RDX Manufacture	23	x		

TABLE 2

MAJOR PROJECTS*

PROGRAM AREAS	FISCAL YEAR											
	70	71	72	73	74	75	76	77	78	79	80	81
Single Base	2	5	3			1			1	1	3	3
Multi Base									1			
TNT	12	1	2			1		1				
Nitro-Guanidine						1	1	1				
Black Powder				1	1						1	
RDX/Comp B	2			1		1	1	3	1	2	1	1
Melt Pour	1					1		1		1	1	
Scamp	1	1	4	3		2	1	1		4		3
Major Cal	9	5	5	10	13	14	17	12	8	7	3	3
Support FAC		1	3	2	6	5	5	9	6	7	9	7
TOTAL	27	13	17	17	20	26	25	28	17	22	18	17

*$1.0 Million or over.

Note - This project list is only a projection. It is reviewed continually and is subject to revision in response to developing technology and changing requirements and funding.

TABLE 3

PRINCIPAL INGREDIENTS OF EXPLOSIVE AND PROPELLANT FORMULATIONS

Explosives	Principal Ingredients
Composition A (1-6)	RDX, Wax
Composition B	TNT, RDX, Wax
Cyclotol	TNT, RDX
Explosive D	Ammonium Picrate
HBX	RDX, Aℓ, Wax, $CaC\ell_2$
H-6	TNT, RDX, Aℓ, Wax, $CaC\ell_2$
Minol	TNT, NH_4NO_3, Aℓ
Octol	HMX, TNT
PBX	RDX or HMX and Polymeric Binder
Tritonal	TNT, Aℓ
Propellants	
Single Base	Nitrocellulose (NC), DNT
Double Base	NC and Nitroglycerin (NG)
Cross-Linked Double Base	NC, NG, HMX, AP*, Aℓ, Polyurethane
Triple Base	NC and NG and Nitroguanidine
Composite	AP*, Aℓ, Polyurethane or Polybutadiene
Base Grain Casting Powder	NC, NG, HMX, AP

*Ammonium Perchlorate

CHAPTER III

THE MILITARY EXPLOSIVES AND PROPELLANTS INDUSTRY

34. Introduction.

This chapter presents an executive overview of the structure and production operations of the military explosives and propellants production industry, to give perspective to the more detailed technical discussions in later chapters.

35. The Composition of the Military Munitions Industry

a. It is national policy that American heavy munitions production shall be primarily a Government operation, and not an industrial empire as it is in some other countries. Most of the actual plants are operated by private contractors, but they are owned and controlled by the Federal Government. The contractor is typically a division of a major U. S. chemical company, which has bid for and received the operating contract for a limited number of years. The company is responsible for all industrial and business operations and for quality control, but usually not for the design of the product or of the chemical processes used. The Government owns the plants and owns the products and is the only customer. Such facilities are known as "GOCO" - Government-Owned, Contractor-Operated.

b. There are some exceptions to the above description. A few plants, mostly Navy, are operated directly by Government employees (GOGO)*. Most small arms, most metal parts and most rocket-propelled missiles are made by private industry for the Government on contract, and so are some specialty explosive and propellant materials; but the great bulk of military explosive manufacture and loading is done in Government plants.

c. Virtually all of the high explosives and most of the propellants for all three Services are manufactured in a network of Army Ammunition Plants (AAPs) scattered mainly

---

* Government-Owned, Government-Operated.

over the eastern and southern portions of the country. They are loaded in other facilities of the same AAPs, in other AAPs which do not themselves manufacture chemicals, and in a series of Naval Ammunition facilities. Two Navy facilities manufacture some supplementary ingredients, notably nitroglycerin and casting powder; but mostly they load explosives obtained from the AAPs. The Navy, in fact, loads most of the bombs for all three services. They also assemble and load a variety of solid rocket motors with propellants partly obtained from the AAPs and partly manufactured in-house. The Air Force does no manufacturing of explosives and propellants at all. They do oversee the manufacture of large solid rocket motors such as Minuteman, and there are a few GOCO Air Force plants for this purpose; but the total size of this activity is small compared to the Army and Navy activity, and these operations do not result in wastewater effluents. The Army also loads some large rocket motors in GOCO facilities, and still others are purchased from private contractor facilities.

d. The map in Figure 2, following, shows the distribution of the AAPs and NADs which do the bulk of the high explosive and propellant manufacturing and loading. There are approximately as many more which deal in small arms or metal parts or serve as storage depots, but they are outside the scope of this study. There are also several AAPs which load warheads but do not manufacture the fills; they are not discussed in any detail in this chapter because their relatively minor wastewater problems are well typified by those facilities which are discussed. There are also a dozen or so private facilities which make and load large rocket motors for sale to one or another of the services, but they are also beyond the scope of this study except for brief mention. They do not present any different operations or problems.

e. Figure 1 itemizes the major operations of those plants which do explosives and propellants manufacturing - which accounts for the great bulk of the wastewater problems - as well as those which fill warheads or rocket motors but may or may not manufacture the energetic ingredients.

36. Major Steps in the Manufacture of Munitions.

a. The manufacture of end item munitions can be divided into four major steps:

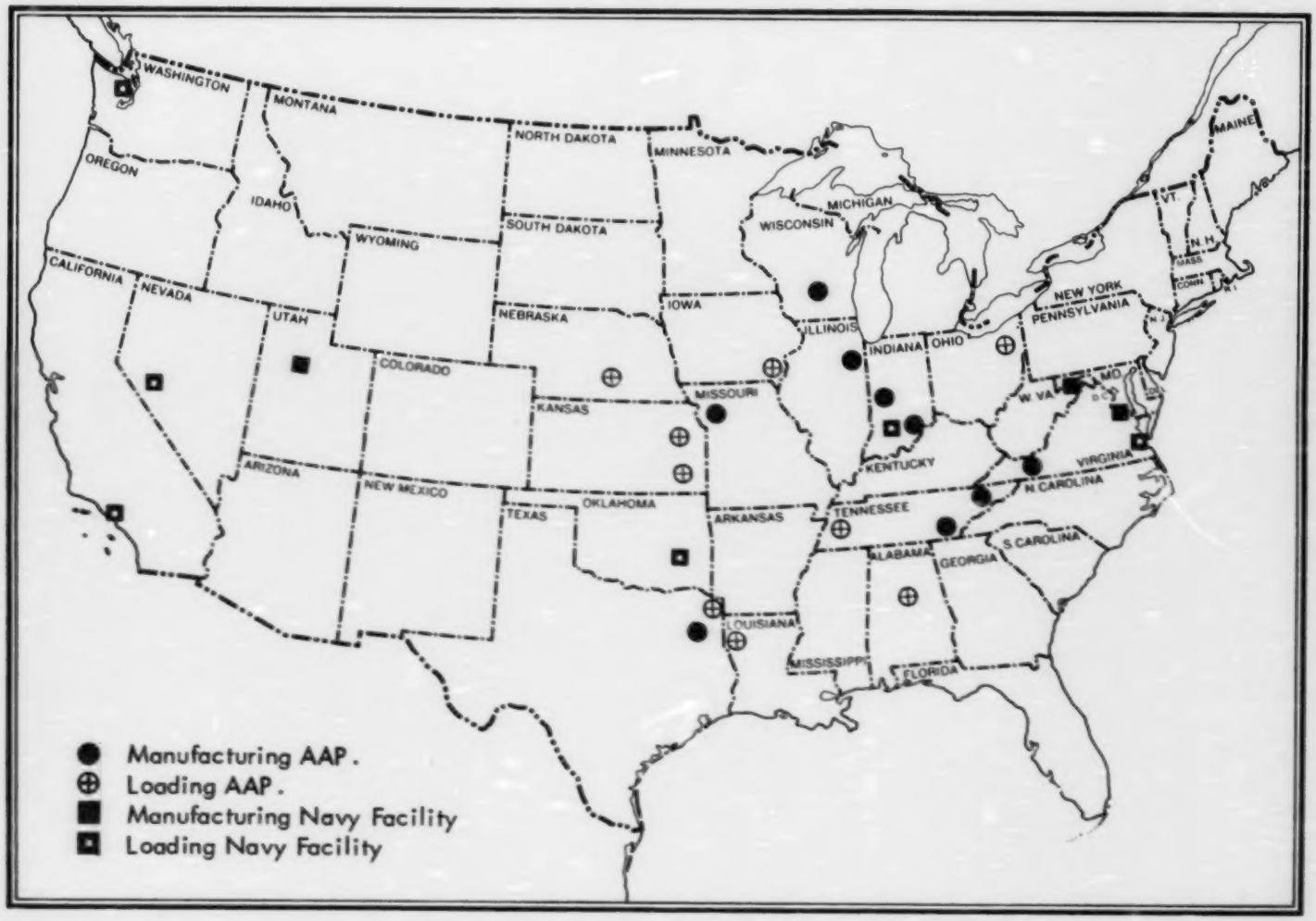

FIGURE 2 - MAJOR EXPLOSIVES AND PROPELLANT FACILITIES IN THE U. S.

- Manufacture or purchase of ingredients such as nitrocellulose, nitroglycerin, TNT, HMX, binders, etc.
- Combination of ingredients into blends, grains or formulations, such as cannon powder, Composition B, extruded double-base propellant grains, etc.
- Loading of warheads, bombs, rocket motors, etc., with the blends or formulations.
- Final assembly and pack-out of complete munitions, including metal parts.

b. Manufacture of Ingredients. The manufacture of chemical explosives and propellants such as TNT or nitrocellulose is completely similar to any other chemical manufacturing operation; and the plants are much like any other chemical plant except that they tend to be more isolated from their neighbors, more spread out within their own fences, and rather less modern than average. They are isolated and spread out for safety, since their products are hazardous materials; and they are less modern than most chemical plants because they tend to be rather old. That last factor is changing rapidly at this writing. A massive modernization program is underway, spurred by the need to reduce air and water pollution but also taking full advantage of opportunities to improve production rates and efficiency by the installation of new and modern equipment.

(1) A typical chemical manufacturing operation is the production of trinitrotoluene - TNT, the dominant military explosive. It involves the manufacture of huge quantities of nitric and sulfuric acids, from sulfur and ammonia, in chemical plants exactly similar to those which make nitric and sulfuric acids in the civilian economy. Mixed nitric and sulfuric acid is then combined with liquid toluene in a series of reaction kettles to produce mononitrotoluene, dinitrotoluene, and finally trinitrotoluene which is a solid. The trinitrotoluene is separated from the mother liquor, washed with water, and then treated with a sulfite solution called "Sellite" which extracts undesirable isomers and impurities, leaving purified α-TNT. The TNT is washed, solidified, flaked, and finally shipped out in boxes.

(2) The operation is a thoroughly typical chemical manufacturing operation not unlike those found in the plastics, petroleum, food, paint or solvents industries. It involves pumping of liquids, stirring of slurries, heating and cooling of streams, filtrations, evaporations, dryings, bagging and boxing, and all the other usual chemical manufacturing operations. It also involves wastewater streams containing unreacted material and by-products, waste acids, decomposition products and extracted impurities, and exhausted reagents. These wastewater streams, if untreated, constitute major pollution problems, and will be discussed in detail in Chapter VI of this report.

(3) The manufacture of nitrocellulose is similar in that it involves the same nitrating acids as used for TNT, but used to treat cotton linters or wood pulp (raw cellulose) in a series of vats and reactors similar to the ones described for TNT. The crude nitrocellulose is similarly subjected to a series of water and aqueous solution washes until it is finally delivered as a purified, fibrous mat - ordinarily wet with water or alcohol for safety. Again, there are major wastewater streams laden with spent reagents and extracted impurities.

(4) Tetryl, HMX, RDX, nitroglycerin, and a whole host of minor ingredients are all made similarly - in typical chemical process plants with typical equipment and controls and typical wastewater streams.

c. Production of Grains or Blends. Most explosives and all propellants are blends of ingredients rather than single substances. Composition B, for example, is an intimate mixture of 60% RDX and 40% TNT, with a little wax added for stability. It is normally made in the RDX plant by blending in TNT and wax right on the production line without ever storing the RDX. There are four different Cyclotols, which are blends of RDX/TNT without wax: 75/25, 70/30, 65/35, and 60/40; and there are two Octols, blends of HMX/TNT: 70/30 and 75/25. They are also made on the RDX/HMX line. There are dozens of other formulations incorporating other ingredients such as tetryl, aluminum powder, PETN, etc. Most of them are made in the chemical manufacturing plant and shipped to the loading plant as flakes or chunks, but some of them can also be made up in the melt-mix kettles in the loading plant.

(1) Nitrocellulose and nitroglycerin are rarely used singly, but are usually incorporated into double-base or multi-base propellants which may have up to a dozen other ingredients including metal powders, oxidizers and various stabilizers and burning rate catalysts. The propellants are processed into shapes which range from pinhead size pellets to cylinders two or three feet in diameter and six feet or so long. The pellets may be used as-is as gun propellants, or they may be incorporated into still more complex formulations in the casting of large rocket motors. The larger cylinders are usually complete rocket motor grains themselves, ready to be inserted into finished rocket motor hardware.

(2) A small but important class of formulations comprises the Composite Solid Rocket Propellants. Composites typically contain a major amount of an oxidizer such as ammonium perchlorate or HMX, a metal powder such as aluminum, a binder which is one or another type of rubber (or a double-base), and up to a dozen trace ingredients such as catalysts, stabilizers, etc. There are literally hundreds of formulations, all to a degree similar; and the choice comes down to specific missions, economics, and special requirements.

d. Loading of End Items. The blends and formulations described above may be loaded into their hardware in the plant where they are made, or they may be shipped to another plant for Load/Assemble/Pack (LAP). There are a number of AAPs which are solely LAP plants, and four of the six Navy plants engage only in LAP.

(1) Most current explosive fills are blends of TNT with other ingredients, and are melt-cast loaded into bombs and warheads. Typically, several thousand pounds of the flaked blend are charged to a stirred melt kettle and heated to just above the melting point of TNT. It forms a mobile slurry when molten, and is poured into the empty bomb or shell cases, where it solidifies. Additional ingredients such as aluminum may be added in the melt kettle, depending on the particular formulation being poured and the particular munition product.

(2) Small rocket motors are usually, but not always, loaded with pre-shaped double-base grains which

are simply slipped into the motor case like a battery into a flashlight. Large motors are usually, but not always, loaded with a cast-in-place, composite grain which is mixed in special kettles and poured into the motor case to harden. An alternate loading method is to fill the motor case with tiny, loose, double-base pellets and then infuse the bed with a Casting Solvent consisting of nitroglycerin and/or similar other energetic solvents for double-base. The solvent semi-dissolves the pellets and blends the whole into a tough, rubbery mass of adequate mechanical strength. Both the pellets and the casting solvent can, of course, have numerous other, minor ingredients. There are enough exceptions and overlapping cases to disprove any manufacturing classification; for example, pre-formed, slip-in grains are also used for certain rocket motors up to a couple of feet in diameter, which is quite large by most standards.

(3) There is also an as-yet small but growing class of formulations known as "PBX", Plastic Bonded Explosive. PBXs are similar to rubber-base, composite rocket propellants in that they consist of 85% or so of powdered high-energy explosive incorporated into a "plastic" matrix (which can be a conventional plastic or a double-base) and cast into place.

e. Final Assembly and Pack-Out. The loaded warheads, rocket motors, etc., are finally assembled with their cases, electronics, etc., into finished munitions. This "dry" assembly involves no wastewater effluents and so is only mentioned in this report. Moreover, the manufacture of metal parts, electronic components, and arming and fuzing devices are beyond the scope of this study and are not discussed.

37. Major Explosive and Propellant Products.

a. Although there are literally hundreds of different explosive and propellant compositions, just four materials - TNT, nitrocellulose, RDX, and nitroglycerin - account for nearly all the production tonnage; and the mainstay is TNT. Figure 3 makes this comparison graphically.

b. As noted earlier, the basic explosives - except for TNT - are rarely used alone, but are mostly used in blends

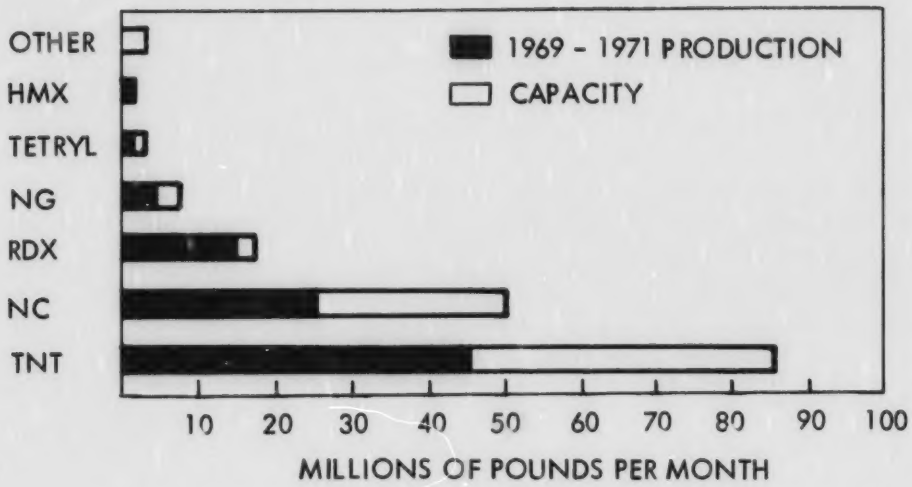

FIGURE 3 - PRODUCTION OF BASIC EXPLOSIVE AND PROPELLANT MATERIALS

or formulations; and the basic tonnages reappear in the production of the composites. Figure 4 makes this comparison.

c. There are literally hundreds of different formulations. Holston AAP alone, to pick an example, makes about 50 variants of TNT/RDX/HMX/etc., and a sampling of them is listed below for familiarization:

- Composition B: RDX/TNT/Wax
- Cyclotol 75/25: RDX/TNT
- Octol 75/25: HMX/TNT
- Composition A-4: RDX/Wax
- LX-03-0: HMX/DATB/Viton A

There are as many variations on nitrocellulose, with and without nitroglycerin; and there are hundreds of variations of solid rocket propellants. The variations are really minor in the present context, and a detailed consideration of them would add little to the wastewater picture.

d. The manufacture of nitration acids, however, is significant. AAP sulfuric acid production for example is about four times the tonnage of TNT and amounts to about 4% of the total US production for all purposes. Figure 5 shows the production rates of nitric and sulfuric acids. Note the change of scale in Figure 5.

38. Wastewater Streams - Sources and Types.

a. The greatest number of AAP water pollutants (or potential pollutants) are similar to those from any chemical manufacturing operation, e.g., acid drippings, solvent spills, rust, stack scrubber drainings, floor washdown, and the like; but an important few are military-unique, e.g., "Red Water" from TNT purification and water solutions of various explosives themselves. They are discussed briefly here under four headings, and in more detail in later chapters.

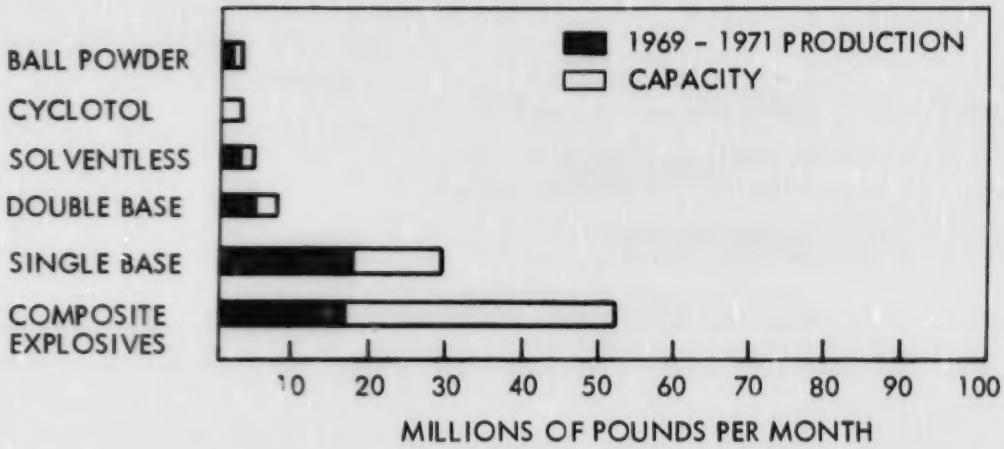

FIGURE 4 - PRODUCTION OF FORMULATIONS AND BLENDS

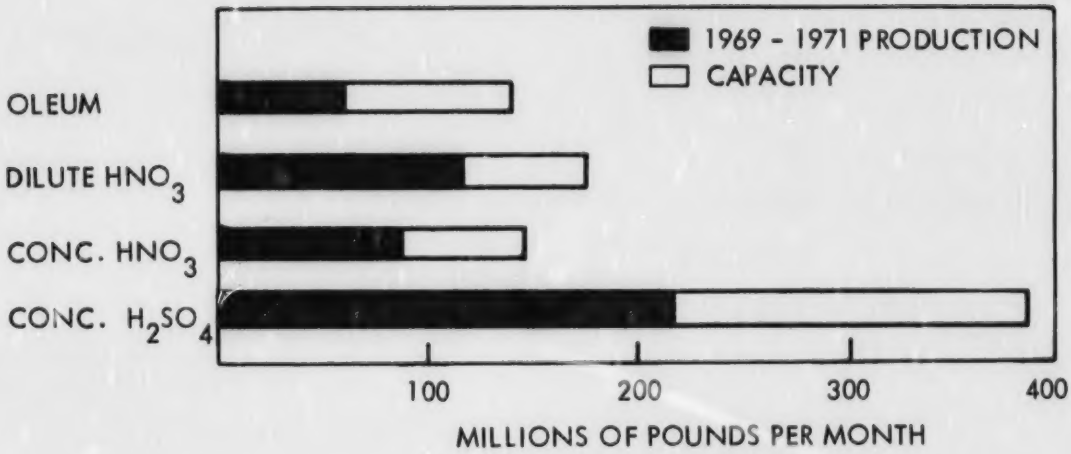

FIGURE 5 - PRODUCTION OF NITRATION ACIDS

(1) Acid Manufacture. Relatively small; mostly leakage plus drainings from air pollution abatement scrubbers.

- o Acid waters, neutralized with lime or soda ash.
- o Sometimes azeotroping agents such as n-propyl acetate.
- o Sometimes heavy metals from equipment corrosion.
- o Nitrobodies from acid recovery.

(2) Basic Explosives Manufacture. The major quantities and the toughest problems are here.

- o Acid waters, treated with lime or soda ash, chemical washes, spills, washdowns.
- o "Red Water" from TNT purification. A complex, brick-red solution of sodium nitrate, sodium sulfate, sodium sulfite, sodium nitrite, and about 17% organics which include sulfonated nitrotoluene isomers and complex, unidentified dye-bodies.
- o Dissolved explosives, e.g., "Pink Water" which is approximately 100 ppm TNT in water.
- o Suspended explosive particles - dust and chips.
- o Sometimes solvents such as acetone, benzene, dimethyl aniline.

(3) Compounding of Explosives and Propellants. Small. Generally similar to streams from manufacturing, except that the chemical purification wastes are absent.

- o Dust and chips.
- o Dissolved explosives. Generally a few to 100 ppm.

- o Solvents.
- o Organic materials such as collagen.
- o Ammonium nitrate or perchlorate.

(4) Load/Assemble/Pack Operations (LAP). Small. Mostly floor washdowns and generally similar to Pink Water.

- o Dissolved explosives.
- o Dust and chips.
- o Heavy metals from paints and corrosion and metal cleaning.

The washout of reject munitions at some LAP plants can contribute substantial additional effluents when washout operations are running.

b. The following Figure 6 summarizes - and oversimplifies for clarity and emphasis - the most characteristic wastewater problems of each of the products or operations highlighted in Figure 1. Every operation has some aspects of every problem, but these are the outstanding ones. The major problems are the large volume, high concentration, chemical wastes from the manufacturing operations, the streams from acid manufacture and loading operations are much smaller and much simpler. The most noticeable waste streams are the Red Water and Pink Water from TNT manufacture and loading, respectively. Red and Pink Water will be discussed in detail in later sections of this report, but they deserve mention in this introductory chapter too because of their importance and their military-uniqueness.

(1) Pink Water is simply a solution of TNT in water. α-TNT is soluble in water to the extent of approximately 100 ppm at ambient conditions, the exact value depending strongly upon temperature and the presence or absence of other solutes. Freshly-made solutions of TNT in water are virtually colorless; but exposure to ultraviolet light, including sunlight, causes the formation of highly-colored, complex, incompletely identified substances similar to dyes. They impart a characteristic pink color which persists even after dilution down to a few ppm with

Wastes	Manufacture of Chemicals										Loading		
	Trinitrotoluene & DNT	Tetryl	Primer materials	RDX/HMX	Nitrocellulose	Nitroglycerin	NC-based propellants	Ball powder	Black powder	Acid manufacture	Filling of warheads	Mfg. of extruded rocket grains	Mfg. of cast rocket grains
Acid waters, nitrate & sulfate salts, etc.	+	+		+	+	+				+			
Red Water	+												
Pink Water	+										+		
Other dissolved explosives and/or dust and chips	+	+	+	+	+	+	+	+	+		+	+	+
Organic solvents and resins		+		+			+	+					+
Chromium and other metals from corrosion										+	+		
Perchlorate and other oxidizers													+

Figure 6 - Major Wastewater Problems

clean water. The release of Pink Water to receiving streams is thus objectionable.

(a) Pink Water is ubiquitous where TNT is made or handled, because of the need to wash down equipment and working areas from time to time. The largest volumes and the highest concentrations are found in plants which manufacture TNT or unload it from obsolete warheads, but it is also the major component in the (relatively small) wastewater streams from loading plants.

(b) There are a number of technically feasible approaches to removing dissolved TNT and the derived dyebodies from wastewaters, and one or another is planned for each installation with the problem. They will be discussed in detail in Chapter VI.

(2) Red Water - which can be almost black at times - also contains dissolved TNT; however, it is not an incidental stream like Pink Water; it is a major by-product stream from TNT manufacture. The mixed-acid nitration of toluene yields not only 2, 4, 6-trinitrotoluene, the desired product, but also a host of other isomers and by-products amounting to approximately 4.5% of the total yield; and it is necessary to remove them from the product. They are removed by extraction with a sodium sulfite - sodium carbonate solution which sulfonates and dissolves them; the extract is called Red Water.

(a) Red Water is a very complex and somewhat variable mixture containing 15% or so of sulfonated or sellited nitrobodies and a number of inorganic salts. Typical components are:

Water

Na_2SO_3-$NaSO_4$

$NaNO_2$-$NaNO_3$

Sulfonated or sellited nitro compounds

Solids

Ash

(b) Red Water is not released into receiving waters. Some of it is sold to paper manufacturers who can use it as a process feedstream, and the rest is evaporated to dryness and the residue incinerated. Extensive research and development is in progress on better processes, and eventually its components will probably all be reclaimed for recycle. These processes are discussed in greater detail in Chapter VI.

(c) The above discussion has purposely been presented from a chemical viewpoint in order to give a feel for the origin and nature of the wastewater streams. It has been usual to describe them in the conventional terms of BOD, pH, suspended solids, etc., and most of the surveys and permits are couched in these terms, although specific, military-unique parameters would be preferable. The waste streams will be treated in detail in this manner in Chapter V.

39. Munition Plant Modernization Program.

a. Both the Army and the Navy have extensive plant modernization and pollution abatement programs planned and underway, and the wastewater picture is changing rapidly. So rapidly, in fact, that field data are out of date by the time they can be put into a report. Perhaps the best way to present the story is to force-fit all information into one of three time eras.

(1) Before Modernization. Manufacturing processes from the early 40's to the late 60's. In general, this meant little or no pollution awareness or abatement, with things

like Red Water being discharged directly into rivers; and effluent characterization was essentially a description of the raw process discharges.

(2) Transition Period. The past few years, today, and the next few years, while new treatment processes are being developed and installed. Presentday plants exhibit a mixed picture of modern abatement facilities alongside antique process units, and effluent streams range from raw discharge to zero discharge. New construction is everywhere, and even more construction is in the planning stage. Research and development is in progress on even better abatement processes. Consequently, even current wastewater data have only the most limited significance except as trend indicators.

(3) After Modernization. That day in the future (1980's) when all the planned installations are complete and on stream. There will still be a few problem areas then, and they are highlighted in the Conclusions and Recommendations section of this report; but by and large, the military munitions plants are planned to be models of clean outfalls. Those effluent data will be the first to be truly indicative of state-of-the-art or best-available. Future data are not available, of course; but forecasts based on laboratory and pilot plant data and on such actual installations as have been put on stream are available; and they form the basis for conclusions herein as to what can be achieved.

b. All of the AAPs and Navy facilities included in this study were constructed during World War II (1941-1943). They were built in areas which, at that time, were generally remote from population centers; and they were built in response to an urgent political-military need (the Second World War) with no regard to environmental impact, which was not a consideration in those days. Thus, there is a discrete period of approximately 25-30 years (1940-1965/70) during which these plants operated - some intermittently - in response to political-military requirements such as Korea and Vietnam, with essentially no change in manufacturing technology or waste treatment methods.

c. The present time frame represents a dynamic, interim situation during which important changes are taking

place. Furthermore, there is a substantial overlap from the condition of "traditional operations" into the present, "interim" situation. It would be inappropriate and misleading to describe as "representative" many plant conditions and many sampling and monitoring data incorporated into this study. Generally, those sampling and monitoring data which are available and which were used in this study (Chapter V) were taken during the 1968-1973 time frame, and usually represent the pre-"interim", or "traditional" 1940-70 manufacturing and waste treatment situation. The degree to which implementation of modernization and pollution abatement programs thus far impacts on treatment effectiveness is discussed in detail in Chapter VI, "Treatment Technology."

d. The modernization program encompasses far more than the mere installation of effluent treatment units. It involves the replacement of obsolete process equipment, the automation of hand-lines, the substitution of continuous processes for batch processes, the reduction of outfalls via recycle, re-use and cascading, and the clean up of the remaining outfalls by terminal treatment. There are also a number of new manufacturing processes with reduced pollution potential under development, for example, new chemistry for TNT manufacture which results in reduced production of Red Water through the generation of lesser amounts of undesired isomers. There are also new processes under development to convert former wastewater streams into feed streams within the plant, for example, the re-work of Red Water into fresh Sellite solution and the reclamation of nitric and sulfuric acids from spent nitration acid. Those modernization programs which impact the wastewater picture are discussed in detail under their respective technologies later in this report.

e. The timetable for modernization is hazy, because it depends upon the future availability of funding. Billions of dollars are involved, and national priorities change. Most serious problems are scheduled for abatement within the next two to five years, but some of the remainder may stretch out into the 1980's.

CHAPTER IV

EXPLOSIVES AND PROPELLANTS PRODUCTION TECHNOLOGY

SECTION I - MANUFACTURE OF EXPLOSIVES AND PROPELLANTS

40. Introduction.

This chapter presents the essential manufacturing processes involved in the production of the major explosive and propellant chemicals and their assembly into end-item munitions, organized by product type or by major process type as appropriate. Minor plant-by-plant variations are not dealt with here. The basic explosives discussed below account for virtually all of the tonnage of U. S. production. There are approximately as many more minor items, but their combined production is so small that their inclusion would have no impact on the wastewater picture.

41. Trinitrotoluene (TNT).

a. TNT plants vary considerably in their physical facilities, but they all embody the same chemical process, the treatment of liquid toluene with mixed nitric and sulfuric acids followed by removal of undesired isomers and residual dinitrated toluene by conversion to soluble species and extraction. The undesired isomers plus residual dinitrated species are removed from the reaction mixture by

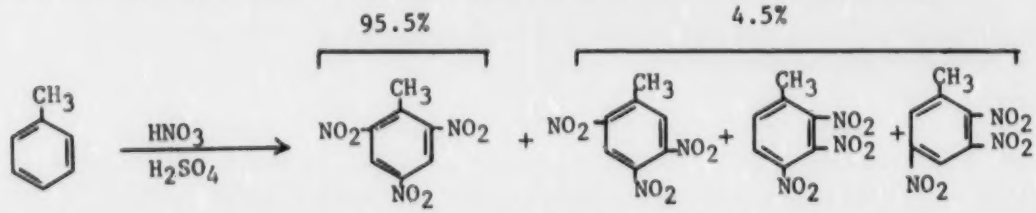

treatment with aqueous sodium sulfite solution - called "sellite" - which reacts with everything except the desired 2, 4, 6 isomer to form water-soluble sulfonate derivatives. The remaining 2, 4, 6 material, α-TNT, is washed and cast molten onto a flaker belt for pack-out.

b. The spent sellite solution, containing the extracted sulfonate derivatives, is known as "red water"; and it

constitutes a major, inherent waste stream. The kinetics of the nitration reaction inherently yield approximately 4.5% of the indicated by-products; and at 1969-1971 production rates, they alone amount to approximately two million pounds per month.

c. Red Water is a deep red, almost black, aqueous stream containing an extremely complex mixture of nitroaromatics and various inorganic salts. The organic portion is mostly accounted for by all the various sulfonated derivatives of the three undesired TNT isomers, typified by the following generalized structure:

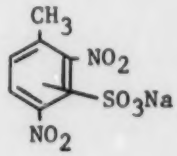

Other organic constituents include smaller fragments, dissolved α-TNT, and complex, unidentified, dye bodies formed from the photolysis of α-TNT by sunlight. The inorganic portion consists mainly of unreacted sulfite plus nitrite and nitrate formed in the extraction reactions. Red Water varies somewhat in composition from plant-to-plant and from run-to-run, but typical components are:

Water

Na_2SO_3-$NaSO_4$

$NaNO_2$-$NaNO_3$

Sulfonated or sellited nitro compounds

Solids

Ash

d. At this writing, no red water is discharged into receiving waters. It is all either sold for paper manufacturing feedstream, or else evaporated to dryness and incinerated to destroy the organics.

e. There are two major variations of the TNT manufacturing process in current use: the conventional,

three-stage, batch process; and the newer, continuous, Canadian Industries Limited (CIL) process. Both use the same chemistry - the nitration of toluene with a mixture of nitric and fuming sulfuric acid (oleum). The sulfuric acid acts as a catalyst and also as a dehydrating agent to absorb the water formed by the nitration reactions.

f. Figure 7 shows the schematic flow diagram of the batch process. The nitration reactions are carried out in three consecutive batch units referred to as "Mono", "Bi", and "Tri" Houses. The feed chemicals to the Mono House are toluene and the waste acid from the Bi House fortified with 60% HNO_3. Reaction to mononitrotoluene goes smoothly and exothermically, and cooling coils are used to keep the temperature at about 40°C during mixing and then at about 60°C for an hour or so afterward. All three isomers, ortho-, meta-, and para-, are formed; but the ortho- is predominant.

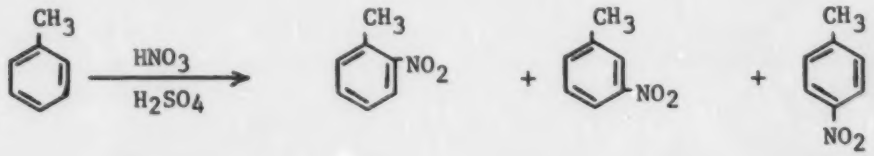

The ortho- and para- isomers nitrate further to α-TNT in later stages, but the meta- isomer represents an impurity which ultimately shows up in the Red Water.

g. After reaction, the charge is allowed to settle, the waste acid is transferred to a storage tank for subsequent recovery, and the partially nitrated toluene ("mono oil") is pumped to the "Bi House" where further nitration is effected with waste acid from the "Tri House" fortified with 60% HNO_3. This time the temperature is raised in steps to 90°C, and the result is a mixture of all possible dinitrated isomers - "Bi Oil".

h. After settling and separation, the Bi Oil is pumped to the Tri House where the feed acid is a mixture of 98% nitric acid and oleum. Temperatures are staged up to 120°C for approximately two hours. The nitrated product from this third nitration stage operation is crude TNT containing α-TNT (2,4,6 trinitrotoluene) which is the desired product, and unsymmetrical TNT isomers which are the

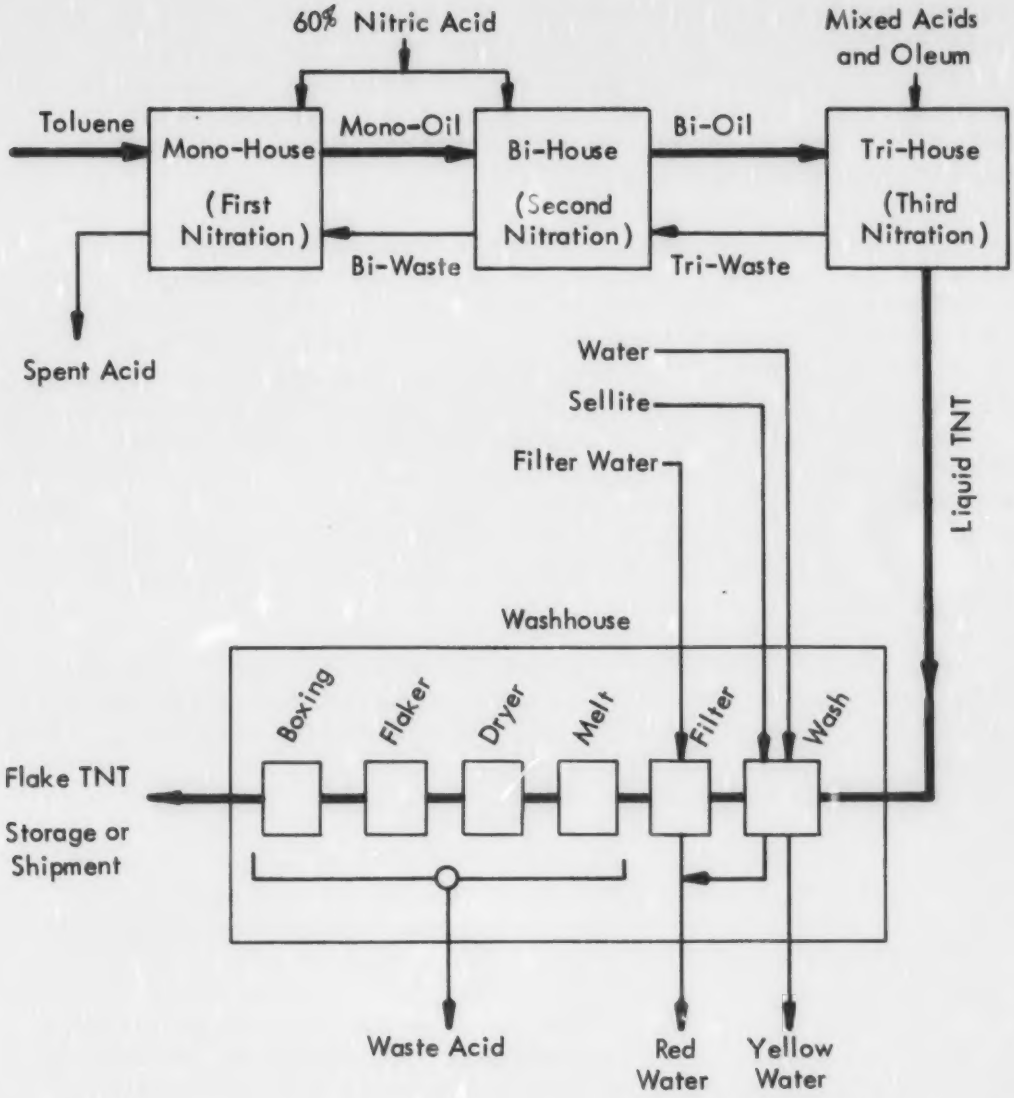

FIGURE 7 - BATCH PROCESS FOR TNT MANUFACTURE

impurities. The crude TNT is fed to the Wash House for purification.

i. The purification of crude TNT involves crystallization in water, neutralization of free acid with soda ash and solubilization and removal of undesirable nitrated products by treatment with a solution of sodium sulfite (sellite). The wastewater from the sellite purification stage is the Red Water which is sent to the red water treatment plant for disposal by evaporation-concentration and concentrate incineration.

j. The TNT slurry is transferred to a filter tank where it is washed and filtered on a screen leaving layers of TNT crystals. The crystals are reslurried with water and pumped to a melt tank where TNT is melted and most of the water is removed by evaporation. The molten product is run into hot air dryers for the removal of residual water. The water-free product is solidified on a water-cooled flaker drum or stainless steel belt, and the resultant film is removed in the form of small flakes by scraping the drum or belt with a beryllium blade. The flaked TNT is boxed and sent to a packing house for transfer to a storage or loading area.

k. Four waste streams are shown in Figure 7: spent acid, waste acid, red water, and yellow water. The spent acid is not discharged; the nitric acid is distilled off and re-used, and the residual sulfuric acid is sold for commercial use. The waste acid (mostly spillage, floor drainage and the like) is neutralized with lime or soda ash and discharged to the chemical sewer. The yellow water, essentially a dilute solution of crude TNT in water plus acids is recycled to the second nitrator; and the red water is destroyed as described above.

l. Acid manufacture and recycle is an integral part of the TNT manufacturing operation; but since it is such a major operation in its own right and acid has other plant uses besides TNT, it is discussed separately in Section II.

m. Sellite manufacture is also a discrete operation in batch TNT manufacture. A typical operation consists of: (1) burning sulfur to produce SO_2; (2) countercurrent scrubbing of the product gas with water to remove sulfur

trioxide and other impurities; and (3) absorption of SO_2 by a solution of sodium carbonate (soda ash) in a countercurrent packed tower. The liquid discharged from the tower flows into a tank and is recirculated until the desired strength (16% Na_2SO_3) is obtained. The soda ash solution used in the process is about 22% in strength and is prepared by dissolving commercial soda ash in water. The wastewaters from the sellite manufacturing operation result from gas scrubbing, spills of soda ash and sellite solution, and floor washdown. They are minor.

n. Figures 8 and 9, following, present schematic flow diagrams of the CIL continuous TNT process. It is not different in principle or chemistry from the batch process described above, but is a modernized version. The nitration of toluene is carried out in six nitrator-separator stages with the organic phase (toluene-nitrobody mixture) flowing countercurrent to the acid phase. The first and third nitration stages have two nitration vessels per separator whereas the remaining four stages have only one nitrator vessel per separator. The process features lower hold-up of hazardous materials due to its continuous rather than batch nature. It also has somewhat reduced waste stream production due to its more efficient control of process conditions and better utilization of recycle streams.

o. The CIL purification operation is also an incremental improvement over the older process. The crude molten TNT first passes through a mixer-settler washer where five separate countercurrent water washes remove the free acids. The acid wash (Yellow Water) is returned to nitrator No. 2 as acid make-up. The TNT then flows through two sellite washers in series where it is neutralized with soda ash and treated with sodium sulfite. Each of the sellite washers is followed by a separator which separates the aqueous phase (Red Water) from the purified TNT phase. The dilute Red Water from the second separator is returned to the first separator, and the more concentrated Red Water from the first separator is sent to the Red Water Treatment Plant. The sellite-treated TNT receives final countercurrent water washes and is pumped to the Finishing Building for drying, flaking, and packaging.

p. The purification for this modernized TNT process differs from that for the older operation in that:

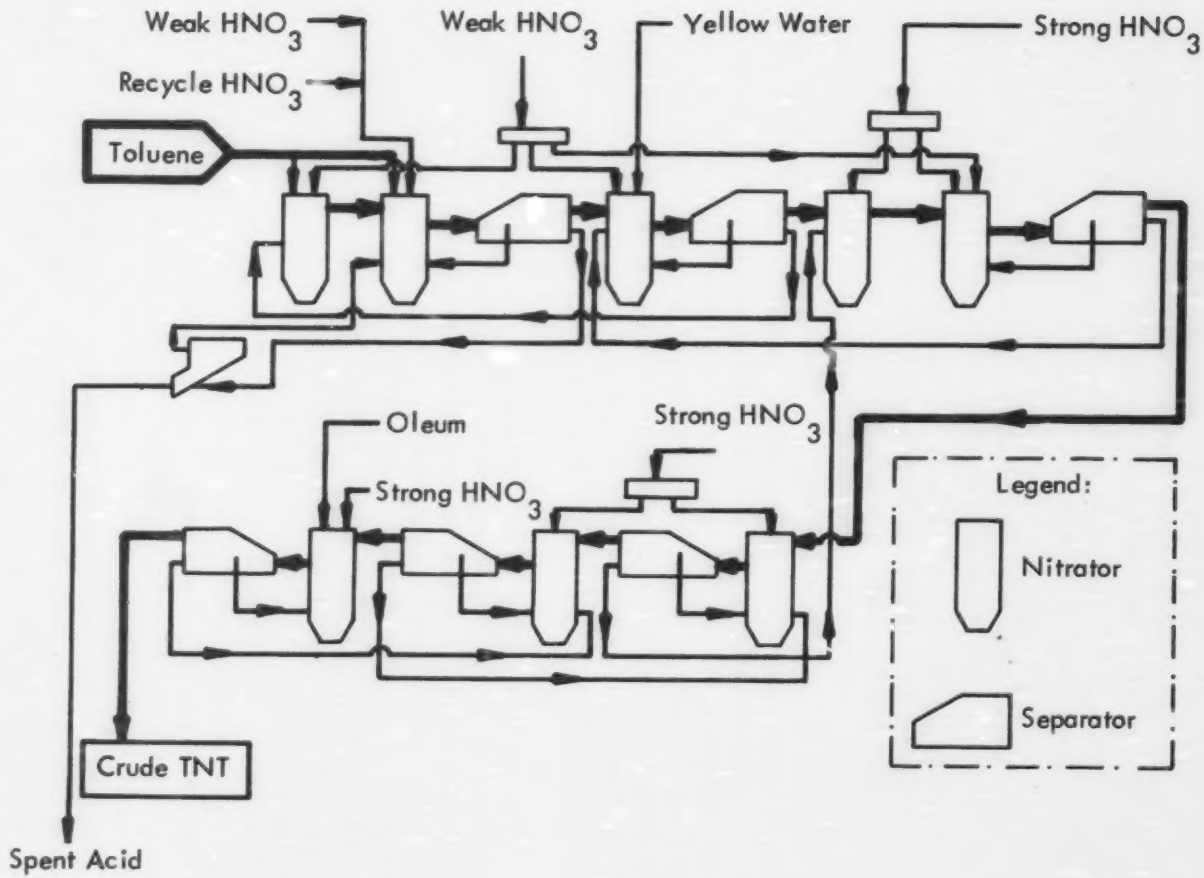

FIGURE 8 - CIL CONTINUOUS PROCESS FOR TNT MANUFACTURE

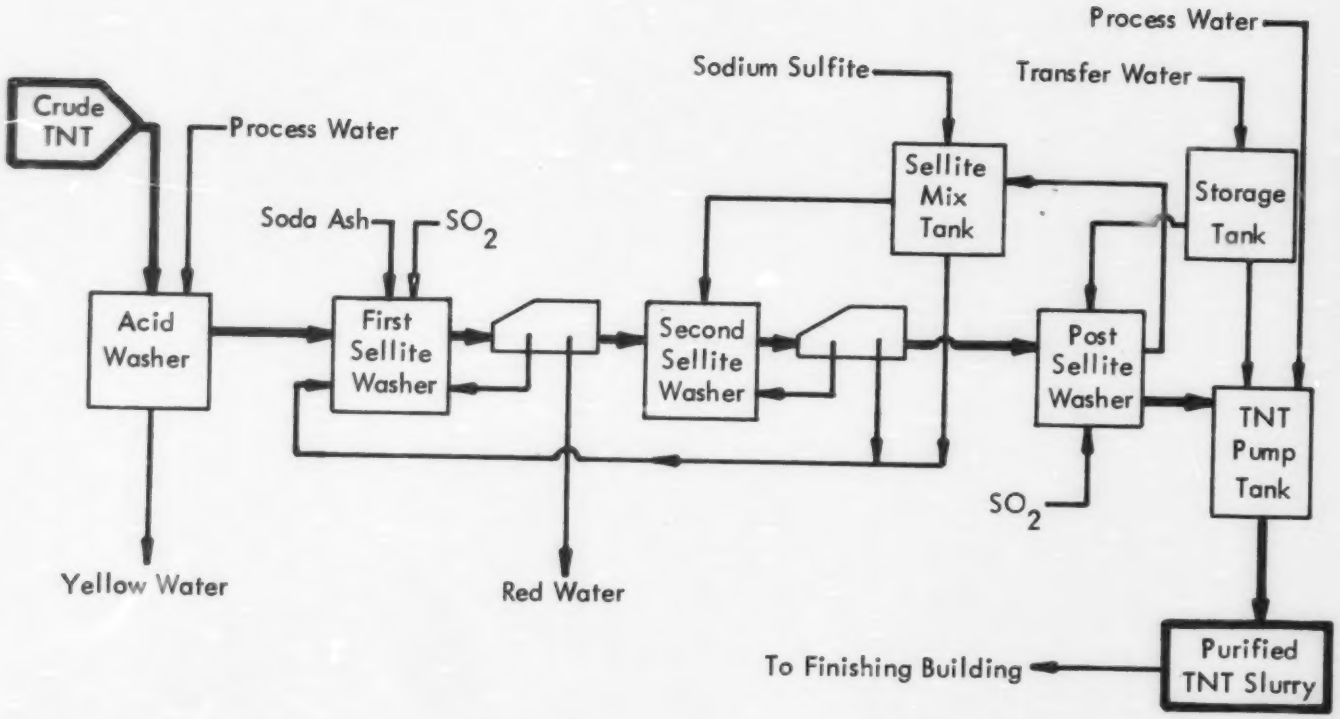

FIGURE 9 - TNT PURIFICATION, CIL CONTINUOUS PROCESS

(1) water is used in place of sodium carbonate solutions for the initial removal of free acids; (2) the TNT is always molten; and (3) sellite solution is prepared directly from dry sodium sulfite instead of through the SO_2-carbonate reaction. Both these changes result in reduced waste streams.

q. Dinitrotoluene (DNT), a closely related explosive, can be made in a TNT plant; but at present, crude DNT is simply purchased from commercial sources and purified by fractional crystallization. The crude DNT is charged to a "sweat pan" and heated to 75°C. The temperature is then decreased in 5°C steps until a temperature of 25°C is reached, at which time most of the pure DNT is in crystal form and the liquid phase containing most of the impurities is drained off to storage. The small amounts of impurities adhering to the crystals are removed by gradually increasing the temperature and draining the further "sweat". When the freeze point reaches 34°C, sweating is discontinued and the charge is rapidly heated to 95°C with additional draining of impurities until tests indicate the freezing point of the remaining charge is above 63°C. The molten purified DNT is then transferred to a water-cooled kettle where "graining" is effected by agitation as the charge cools. The resulting DNT crystal powder is discharged to a hopper, screened, and packaged in drums for storage and shipment.

r. DNT purification is essentially a pollution-free operation, because the separated impurities are all fed to the TNT manufacturing operation for conversion to TNT. Aqueous effluents are limited to uncontaminated cooling water.

s. The thrust of current TNT modernization plans viz-a-viz wastewater clean-up is primarily the installation of collection and treatment systems plus the conversion of some old lines to the modern CIL process. There are some new processes in the research and development stage which offer much lower pollution potential, for example a low temperature process under study at Stanford Research Institute; but they are not close to commercialization, and for the foreseeable future TNT is going to be made by one or both of the processes described above. There are also studies in progress aimed at eliminating the Red Water problem by reclaiming its constituents for feeding back to the

TNT manufacturing process, and these studies are discussed in detail in Chapter VI.

42. Tetryl.

a. Like TNT, tetryl is manufactured by nitrating an aromatic feed-stock in mixed nitric/sulfuric acid, followed by washing and recrystallization. Demand for tetryl is small compared to that for TNT, and the entire current U. S. capacity (1.3 million pounds per month) is represented by the twelve production lines at Joliet Army Ammunition Plant. At this writing (1975), tetryl is not being manufactured; and is not expected to be manufactured in the future. It is discussed anyway because it has been important and could conceivably be again.

b. Tetryl production is a batch operation involving sulfation of dimethylaniline (DMA) with 93% sulfuric acid to produce dimethylaniline sulfate (DMAS), and subsequent nitration of DMAS with a mixture of sulfuric and nitric acids (see Figure 10, following). The nitrated mix is cooled and sent to a stainless steel neutch (a container with filter) where the free acid is separated. The crude tetryl is washed and slurried through a tank, filtered, and transferred to a dissolving tank where acetone from a reflux condenser dissolves the tetryl and washes it into a still charged with 45% acetone. When all the tetryl has been transferred to the still, the acetone is removed by evaporation; and the precipitated tetryl is slurried to a neutch, partially dried and transferred to the wet storage area (lag house). When enough purified tetryl is accumulated in the lag house, it is carted by powder buggy to the drying house, where it is dried by hot air blown through bins and then transferred to the packing-shipping house for shipment and/or storage.

c. The major waste stream from tetryl manufacture consists of spent nitric and sulfuric acids. These are recovered and sent to the sulfuric and nitric acid concentration facilities, described elsewhere in this report. Other wastewater sources are the wash water from tetryl purification, tank cleanings, chemical spills, cooling water, and water and sellite solutions used for floor washdown and equipment cleanup.

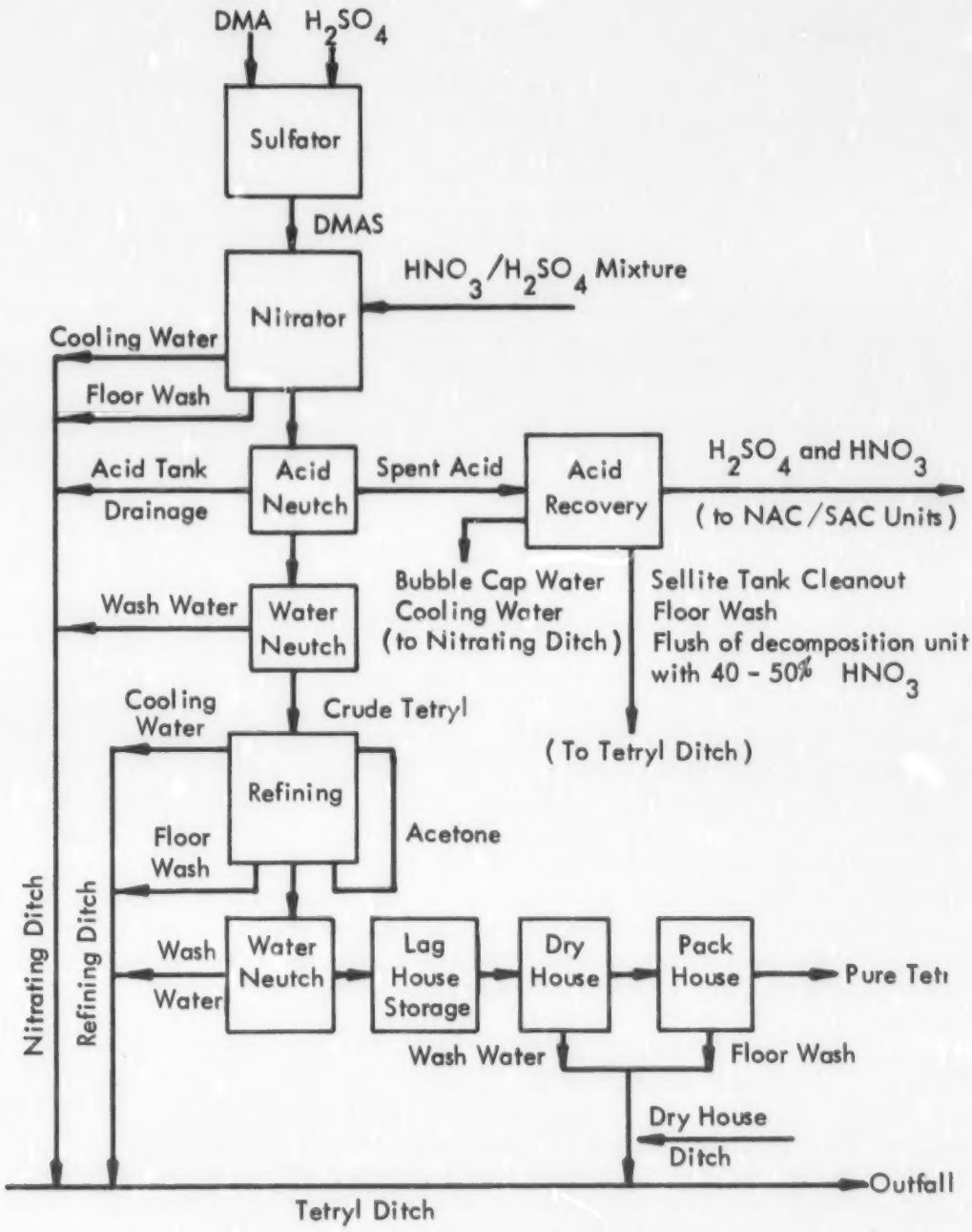

FIGURE 10 - TETRYL MANUFACTURING PROCESS AT JOLIET AAP.

43. RDX and HMX.

a. RDX, cyclotrimethylenetrinitramine, is the third most important munitions explosive from a tonnage viewpoint, with production running as much as 15 million pounds per month. HMX, cyclotetramethylenetetranitramine, is a by-product produced in much smaller amounts and separated in the RDX purification process.

b. The chemistry of RDX/HMX manufacture is straightforward. The starting material, hexamine, is purchased from commercial suppliers and nitrated with ammonium nitrate, nitric acid in acetic acid, and acetic anhydride solution to yield the two products directly:

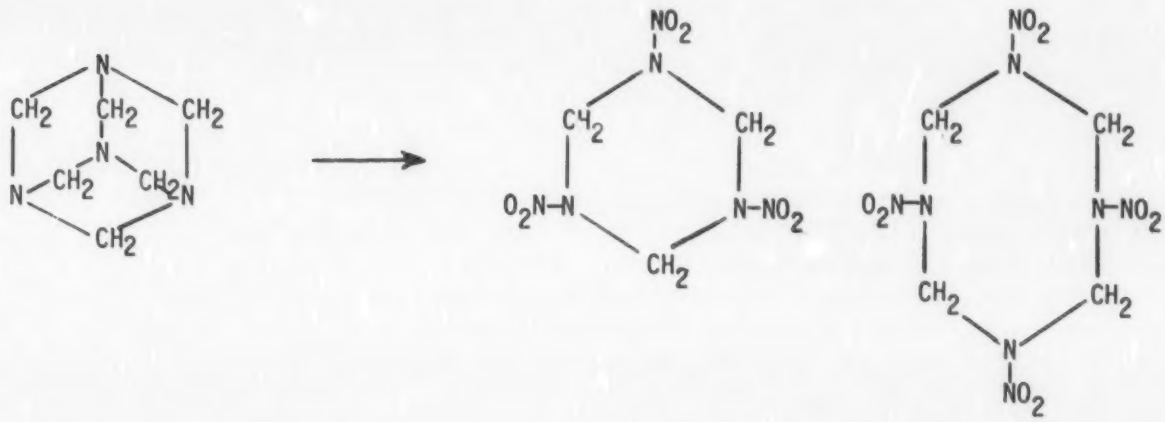

HEXAMINE RDX HMX

c. Manufacture starts with dissolving hexamine in glacial acetic acid. This solution is pumped to a batch nitration vessel where acetic anhydride is added, followed by pre-prepared ammonium nitrate - nitric acid solution. Nitration is carried out in a water-cooled reactor until reaction ceases, and the mixture is then "aged" to effect chemical equilibrium. The mixture is then diluted with recycle wash water and pumped to the washing operation.

d. The crude RDX/HMX slurry is filtered, washed with water, and re-slurried for transfer to the recrystallization facility. There, an organic solvent (which can be cyclohexanone, acetone or toluene, depending upon the type

of crystal wanted) is added and the explosive dissolved. Water is separated and solvent distilled off to leave a hot, concentrated solution of explosive in solvent. The solution is allowed to cool, and the purified explosive crystallizes out.

e. The crystals are filtered off, re-slurried in water and usually sent to a compounding operation. There, the water-wet explosive cake is blended with molten TNT (for example) in steam-heated kettles; the water is decanted; wax (if used) is added; and the molten slurry is solidified on a cooled flaking belt for boxing and shipment.

f. HMX, produced as a side reaction in RDX manufacture, is separated in the recrystallization step and is recovered from the mother liquor by a separate recrystallization.

g. Neither RDX nor HMX is ever handled pure and dry, because the danger of accidental explosion is too great. Most of the production is immediately incorporated into formulations such as Composition B wherein the RDX crystals are coated with TNT and/or wax. Smaller amounts are formulated into compositions wherein the RDX is desensitized with small amounts of wax or polyisobutylene. Where the pure explosive is needed elsewhere for blending into other compositions, it is shipped water- or solvent-wet.

h. Wastewater streams are partly recycled and partly sewered, with additional recycle and/or recovery facilities under construction at this writing. In general, major exit streams are reprocessed; and cooling water, pump seal water, floor washdowns, and the like are sewered.

i. The filtrate from the post-nitration filtration, along with the first wash water, is sent to a recovery facility where the nitric acid is neutralized with sodium hydroxide and pumped to a primary evaporator. About 80% of the feed is volatilized and condensed as 60% acetic acid for re-use. The remaining 20% is withdrawn as a sludge, diluted and heated to about 100°C. A seed slurry of RDX is added; and the mixture is cooled, whereupon a crop of RDX-HMX crystals separates and is sent back to the washing step of the manufacturing line. The remaining liquid is sent to a secondary evaporator that recovers more acetic

acid, and the sludge from the secondary evaporator is steam stripped to recover the remaining acetic acid. The recovered acetic acid is all purified, concentrated and re-used.

j. Sodium hydroxide is added to the stripped sludge, converting the ammonium nitrate in the sludge to sodium nitrate and ammonia, the residual acetic acid to sodium acetate, and the residual RDX and HMX to ammonia, formates, amines, and sodium nitrate. The ammonia and amines released in the reactor are absorbed in water and distilled to recover anhydrous ammonia and amines. The sludge, containing mostly sodium nitrate, is currently being made into fertilizer. Small amounts of ammonia and amines are discharged in the effluent wastewater.

k. Other than the above, most of the wastewater consists of cooling water, pump seal water, condensate, washdown, and the like; and is currently sewered to the river. Modernization currently in progress will provide treatment, and is discussed later in this report.

l. Figure 11 diagrams the RDX-HMX manufacturing process. The acid manufacturing and recovery processes are discussed separately in Section II, "Manufacture of Nitrating Acids."

44. Nitrocellulose.

a. Nitrocellulose, at 25 million pounds per month recent production, is the second largest (after TNT) volume AAP product in the U. S. It is made by the mixed-acid nitration of cellulose, a natural high polymer of sugar obtained from cotton linters or wood pulp. Figure 12 outlines

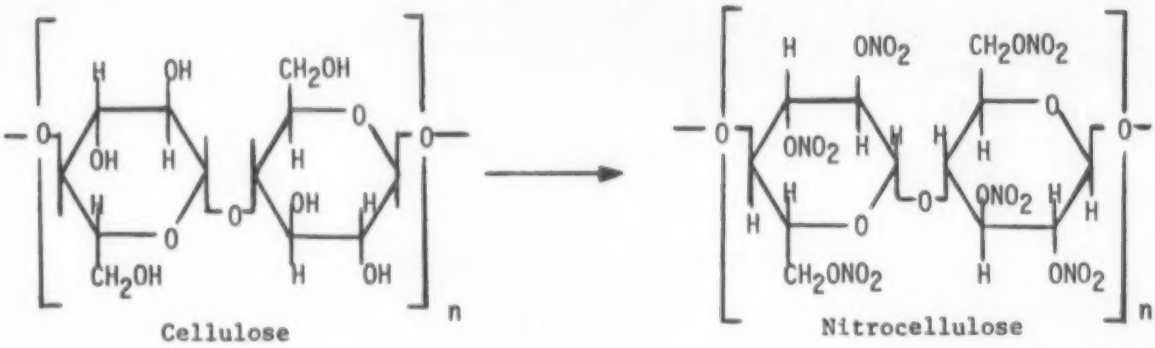

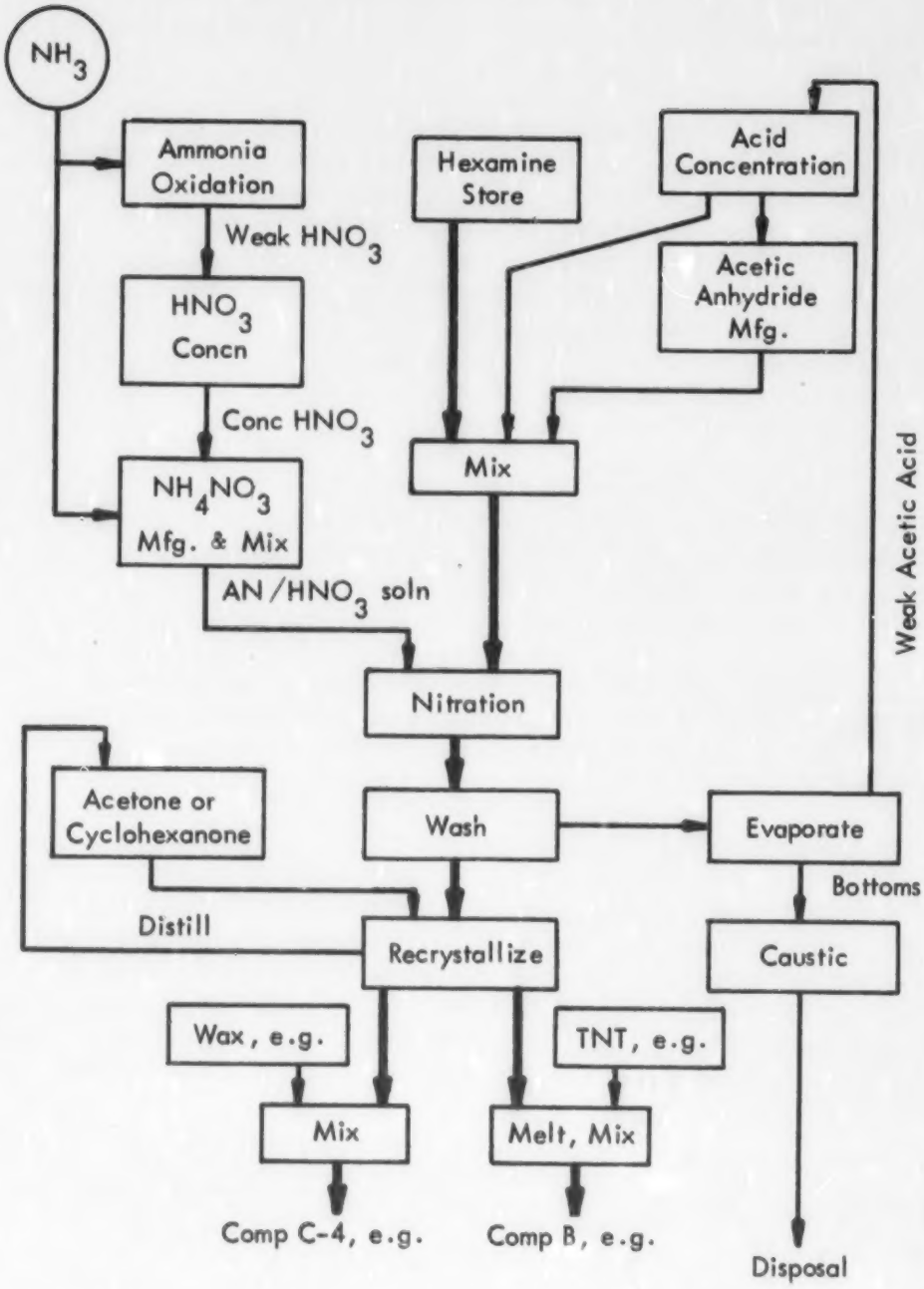

FIGURE 11 - RDX - HMX PROCESS

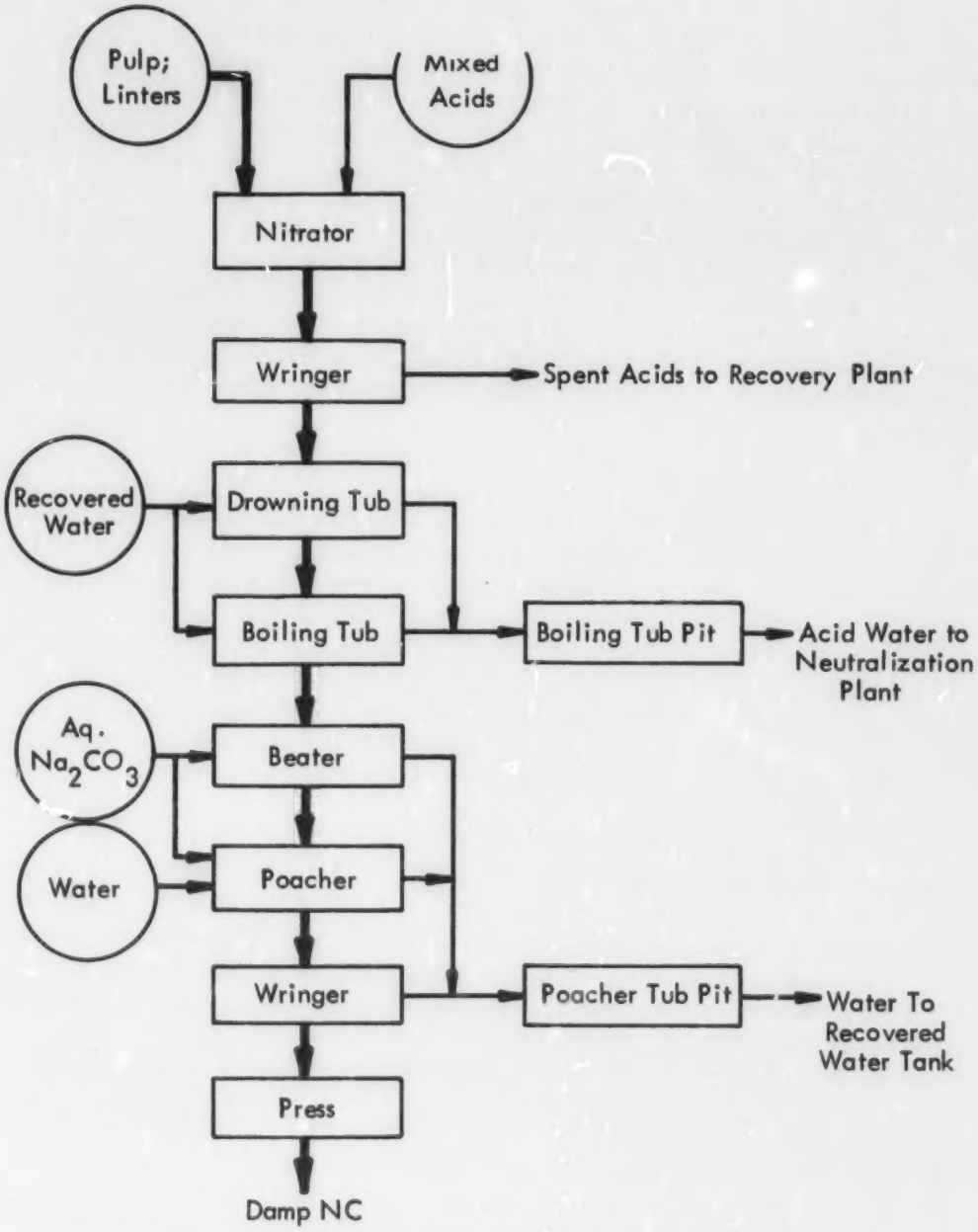

FIGURE 12 - BATCH NITROCELLULOSE MANUFACTURE

the manufacturing process. Pre-purified cotton linters or wood pulp are shredded and dried to remove excess moisture and then treated with mixed nitric and sulfuric acids in "dipping pots" fitted with agitators to esterify most of the hydroxyl groups. In theory, it should be possible to nitrate all of the hydroxyl groups as shown in the idealized formula above for a nitrogen content of 14.14%; but in practice the most desirable compositions fall between 10.5% and about 13.8%, representing a hydroxyl substitution of about 1.8 to 2.9 per glucose anhydride unit. These values are controlled by the proportions of acids used. The reactor is cooled, and treatment is continued until reaction stops. The result is a slurry of nitrocellulose fibers in mixed acid now somewhat diluted with the water formed in the reaction.

b. The NC/acid slurry is passed through a centrifugal wringer which removes the bulk of the spent acids for recovery, and is then dumped into a drowning tub filled with water. The NC/water slurry then enters a large diameter flume line and is conveyed to the boiling tub house. The water used to convey the NC acquires about 3% total acidity and is discharged to the boiling tub pits. Water is then added to the NC in the boiling tub to attain a total acidity level of 0.25 to 0.50 percent. The mixture is heated to 96°C and boiled for 15-40 hours (acid boil).

c. At completion of the acid boil operation, the water is drained to the boiling tub pits. The NC is washed for five minutes with recovered or filtered water. The NC then receives two neutral boils, using filtered water, at 96°C for 5-8 hours. The NC is washed with recovered or filtered water for 30 minutes after the first boil and five minutes after the second boil. The water from the two neutral boils and washes is discharged to the boiling tub pits.

d. The NC is then slurried to the beater house and pumped through the primary and secondary Jordan beaters. Prior to entering the beaters, approximately one pound of sodium carbonate is added for each 1000 pounds of NC to neutralize any residual acids. The NC is then slurried to the poacher house. In the poachers, the NC is boiled in a soda ash solution (four pounds sodium carbonate per 1000 pounds of NC) at 96°C for four hours, and in a fresh

water (neutral boil) step at 96°C for two hours. The NC is allowed to settle for one hour and the water is drained.

e. The NC is passed over screens to remove any foreign material and finally over a vacuum filter to remove water and excess soda ash. The NC is then slurried to the blender house where it is circulated as a water slurry for five hours and sampled for final product quality. The NC is conveyed by water slurry to the final wring house where it is wrung to approximately 30% moisture by weight. The water from all of these operations is discharged to the poacher pits. Water flow is shown in more detail in Figure 17, paragraph 60.

f. At this writing, a continuous NC line is under construction at Radford AAP. In this process, the NC is continuously nitrated at a rate of 150 lb/min and dumped into a centrifuge. The centrifuge is operated to remove acid from the NC, and the acid is recovered. The NC is then washed by a spray system and centrifuged to remove the spent acid. The NC, containing 58% total acids by weight, is then discharged to a slurry tub where water is added. The NC/water slurry is agitated and then pumped to the boiling tub house as a 10% slurry having an acid strength of 1 to 1.5 percent. From the slurry tub on through the process, the system is identical to the conventional process.

g. In the modernized process, virtually all water will be recycled. The drain water from the first acid boil will be used as make-up water for the flume line; the water from the first neutral boil will be used as make-up water in the slurry tub which follows the acid wringer; and the balance of the water used in the process will be sent to the poacher pits, clarified by centrifugation and pumped to the recovered water tank for re-use as shown. Note that this eliminates the use of the acid neutralization plant indicated in Figure 12 with its high dissolved solids effluent, and leaves little wastewater except the usual washdown, spills and leaks, etc., and the squeezings from the dehydration press.

45. Nitroglycerin.

a. Nitroglycerin, "NG", is an explosive plasticizer largely used as an ingredient in double and multi base

propellants and in the casting of plastisol double base rocket motors (cf. paragraph 46 and 56). Chemically, it is glyceryl trinitrate:

$$\begin{array}{l} CH_2\text{-}ONO_2 \\ | \\ CH\text{-}ONO_2 \\ | \\ CH_2\text{-}ONO_2 \end{array}$$

and is made by the nitration of glycerin with mixed nitric and sulfuric acids. Nearly all U. S. military production is made by the Biazzi Process, and it is largely made where it is used to avoid having to ship it. The various plants are all nearly identical, and the following description is a composite one.

b. Like all continuous processes, the Biazzi Process is characterized by a very small inventory of material in the reactor and by a careful balancing of flow rates and cooling. The entire unit, including the nitrator, two acid separators and three soda water washers, is contained in one room (units 1 through 11 in Figure 13). To give a feel for the small scale, the nitrator is a vessel approximately two feet in diameter and four feet tall, jammed full of cooling coils; the acid separator is approximately five feet in diameter and 18 inches high, and the soda water washers are approximately 18 inches in diamter by three feet high.

c. Glycerin and Mixed Acid are metered into and through the nitrator, with strong cooling, at a rate dependent on the strength of the nitrating acid. The effluent stream goes through the acid separator where the spent acids are removed, and then into the first washer to be contacted with a 16% soda ash solution for neutralization of residual acid. Then through two fresh water washes and another separator. After washing, the NG goes to an emulsifier where a 3% soda ash solution equal in volume to that of the NG is added. The emulsified NG is conveyed to a temporary storehouse to await use. At the time of use, the emulsified liquid goes through a separator, and the spent water is discharged to waste.

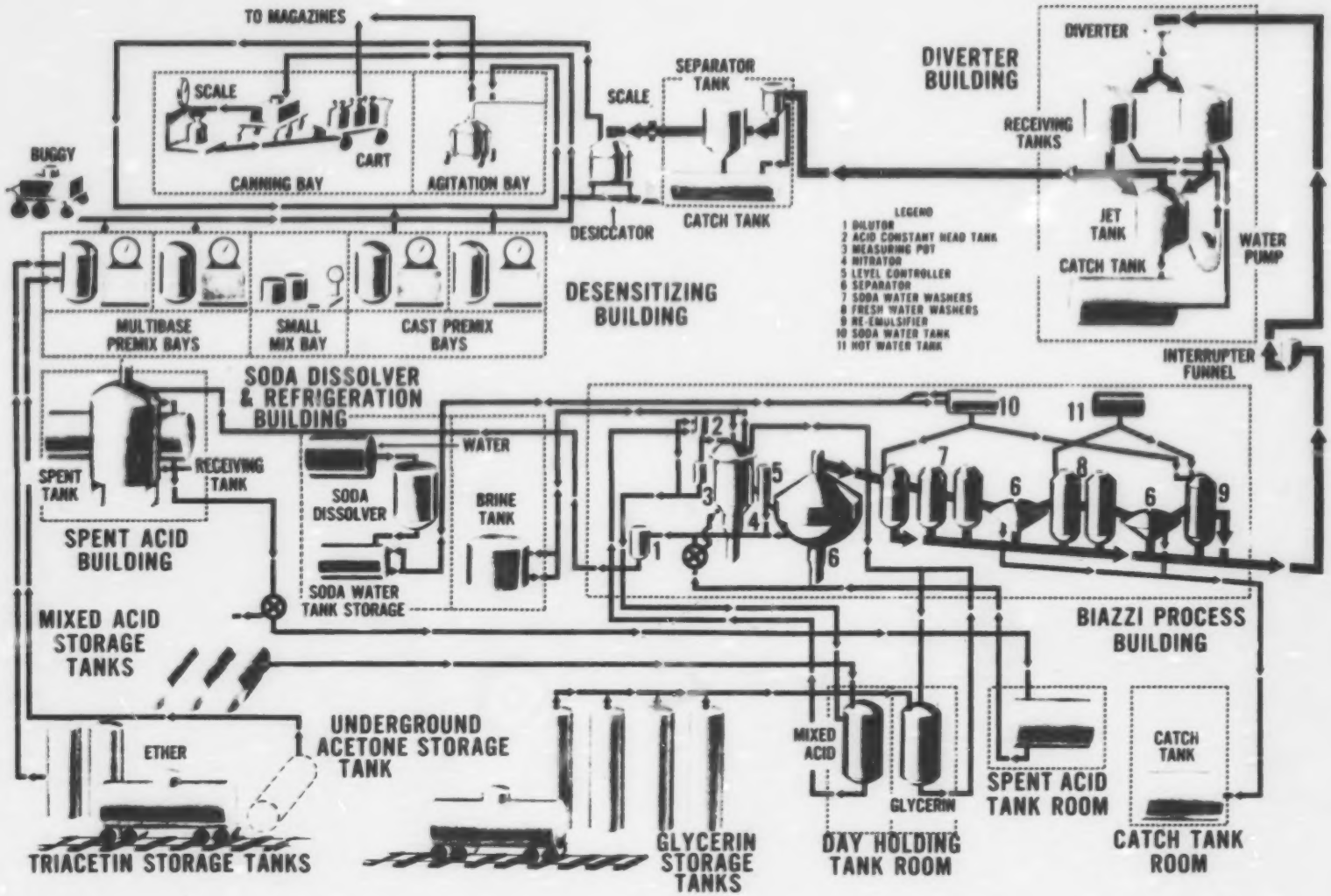

FIGURE 13 - BIAZZI NITROGLYCERIN PROCESS (Courtesy U.S. Naval Ordnance Station, Indian Head)

d. The water balance at maximum production (52,800 lb/day) for one NG line (at Radford AAP) which has been extensively studied is shown in Figure 14. The total discharge of 86,500 gpd includes 0.51 gallon per pound of NG of wash and transfer water; the rest is uncontaminated cooling water. Planned modernization is projected to reduce the discharge to 27,300 gpd with 14,400 gpd recycled.

e. There are also a few of the older, batch NG lines still in operation. They use the same chemistry and processes as the Biazzi, are being phased out, and will not be discussed in any additional detail.

46. Nitrocellulose-Base Propellants.

a. Nearly all the nitrocellulose and nitroglycerin made in the various Ammunition Plants go into the manufacture of Single Base, Double Base, or Multi Base propellants for shells and rocket motors. These propellants are made by colloiding and molding processes not unlike those used in the plastics industry; in fact, nitrocellulose was the first of the modern plastics. Single Base propellants are compositions consisting mostly of nitrocellulose with minor amounts of plasticizers, stabilizers, burning rate catalysts, etc. Double Base implies nitrocellulose plus a liquid nitrate ester, usually nitroglycerin, with stabilizers, catalysts, etc.; and Multi Base implies a combination of several nitrate materials such as nitrocellulose, nitroglycerin, nitroguanidine, triethyleneglycol dinitrate, with stabilizers and the like. Although the formulations are legion, the materials are all quite similar in manufacture and properties; and they will be discussed as classes.

b. A major portion of U. S. military nitrocellulose goes into Smokeless Powder for shells and into Casting Powder for missiles. Although called "powder", these materials are physically cylindrical pellets ranging in diameter from a fraction of a millimeter to a centimeter or more. The larger ones may contain multiple perforations to increase their surface area.

c. Solvent Extrusion is a major manufacturing process for smokeless and casting powders. In this process, water- or alcohol-wet nitrocellulose fibers from the NC Plant are masticated with solvents such as alcohol-ether and/or

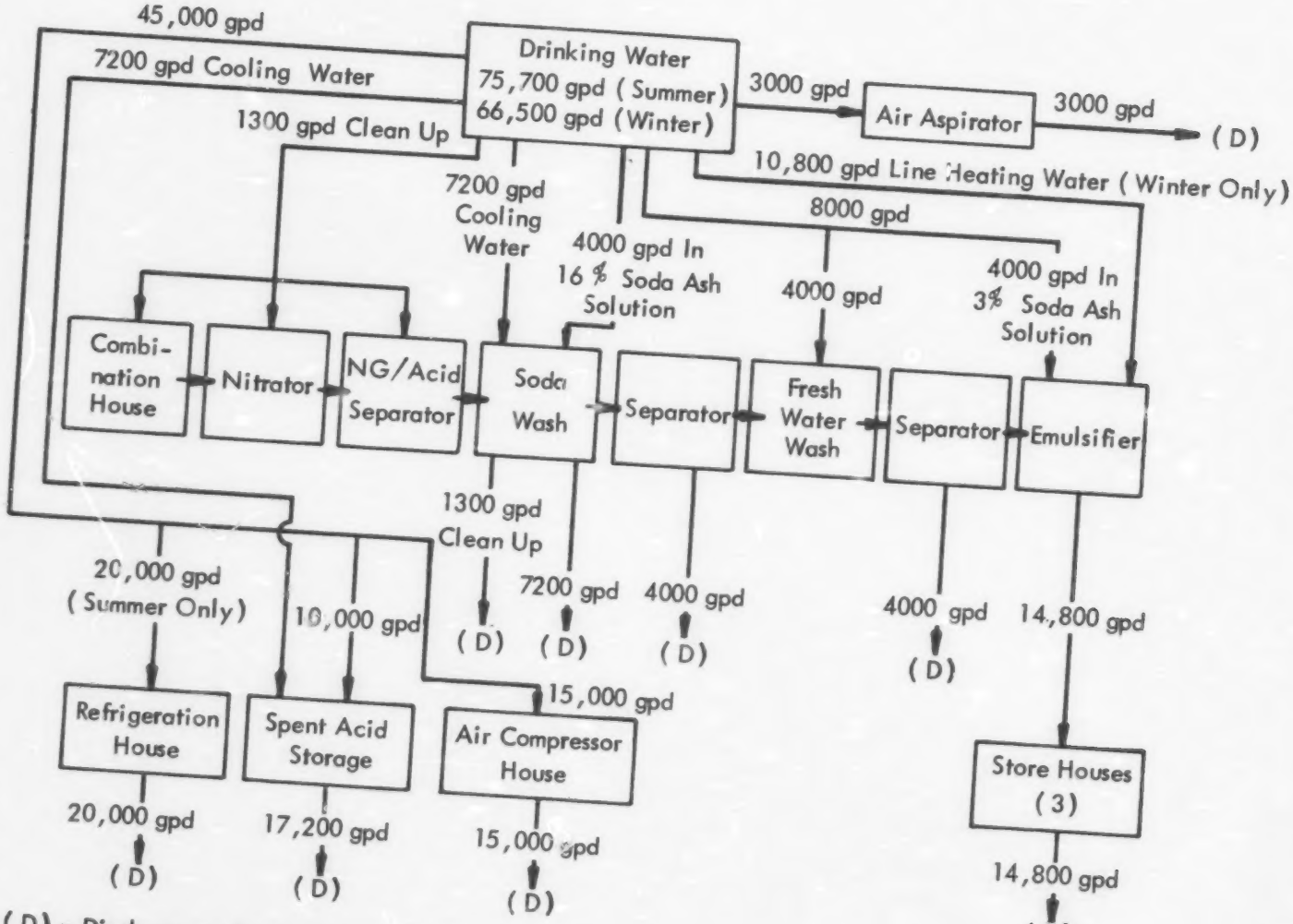

(D) - Discharge to Sewer (Total - 86,500 gpd)

FIGURE 14 - WATER BALANCE FOR ILLUSTRATIVE, 52,800 LB/DAY, BIAZZI NG LINE AT RADFORD AAP

acetone in a heavy duty mixer until the mass forms a homogeneous plastic dough. The stabilizers, catalysts, etc., are blended in at this point, as are nitroglycerin, nitroguanidine, etc., if the formulation is to be Double or Multi Base. The dough is pressed into preliminary blocks for feeding to a finishing press which extrudes long strands of approximately the desired diameter through single or multiple dies. Smaller strands are usually solid, while larger ones frequently have longitudinal channels in them. The soft, "green" strands are cut to convenient lengths (or to the final pellet length) and placed in drying ovens to drive off the volatile solvents. Considerable shrinkage takes place during drying, and the strands come to their final diameters. The dried strands, which may be brittle or rubbery depending upon the formulation, are then cut to final pellet length. In some processes, the pellets are given a final hot water soak to drive off traces of solvents and then final-dried.

d. In the Solventless Process, a pre-mix is typically made from chopped or powdered nitrocellulose plus liquid nitroglycerin and the minor ingredients, dispersed in a water slurry as a carrier. The pre-mix paste is centrifuged to remove most of the water, bagged and air-dried. The air-dried paste is tumble-blended with any other ingredients and then passed through remotely-controlled differential-speed-roll calenders which colloid it into a homogeneous sheet. Several sheets are then passed through a series of evenspeed rolls which compact them into a single sheet of specified thickness. A slitter machine cuts the evenspeed sheets into strips. These are rolled into "carpet rolls" which are fed into the finishing press just as in the Solvent Process. This time, though, there is little or no shrinkage of the strand because it contains little or no volatile material.

e. Rocket motor grains up to two feet or more in diameter and up to six feet long (although most of them are much smaller) are made by the above extrusion process, in mammoth, heated extrusion presses; using either solvent or solventless pre-mixing of the ingredients.

f. Certain double or multi base formulations have additional ingredients that make them High Energy, for example metal powder fuels such as aluminum and ammonium

perchlorate or HMX oxidizers. These are usually made in the form of Casting Powder or Base Grain, rather than as large extrusions. Casting powder particles are very fine pellets, a fraction of a millimeter in diameter, and are intended for further combination with energetic plasticizers in a subsequent rocket motor casting operation.

47. Ball Powder.

a. Ball powder is a special case of the solvent NC propellant process in which the propellant is formed into spheres not more than 0.030 inches in diameter. The operation is not large by munitions standards - recently around 900,000 pounds per month, for about seven million gallons of contaminated wastewater - but is of interest because the manufacturing process bears little resemblance to conventional propellant manufacturing as described above.

b. Figure 15 shows a flow diagram of the ball powder line at Badger AAP. The feed at Badger is surplus single base propellant. It is ground in water slurry, extracted with benzene to remove non-NC ingredients and then dissolved in ethyl acetate which forms a separate liquid phase on top of the transfer water. Agitation is adjusted so as to form an emulsion of the NC solution dispersed in the water, and a protective colloid such as collagen is added to prevent the globules from coalescing in the subsequent solvent removal step. Next, sodium sulfate is added to the water phase to set up an osmotic pressure gradient and draw out most of the water from the globules. The temperature is then raised to 69°C (the boiling point of ethyl acetate) to remove the NC solvent. Agitation is maintained, the protective colloid prevents globule coalescence, and the globules slowly harden to firm spheres suspended in the water phase.

c. The spheres are next coated with dinitrotoluene to retard their initial burning rate upon ignition, by adding a solution of DNT in a non-solvent for NC or as an emulsion and agitating until the DNT is completely absorbed into the surface layer of the spheres.

d. The spheres, still in water slurry, are next passed between rolls to flatten them to ellipsoids of controlled minor dimension, and at last filtered off and dried. They

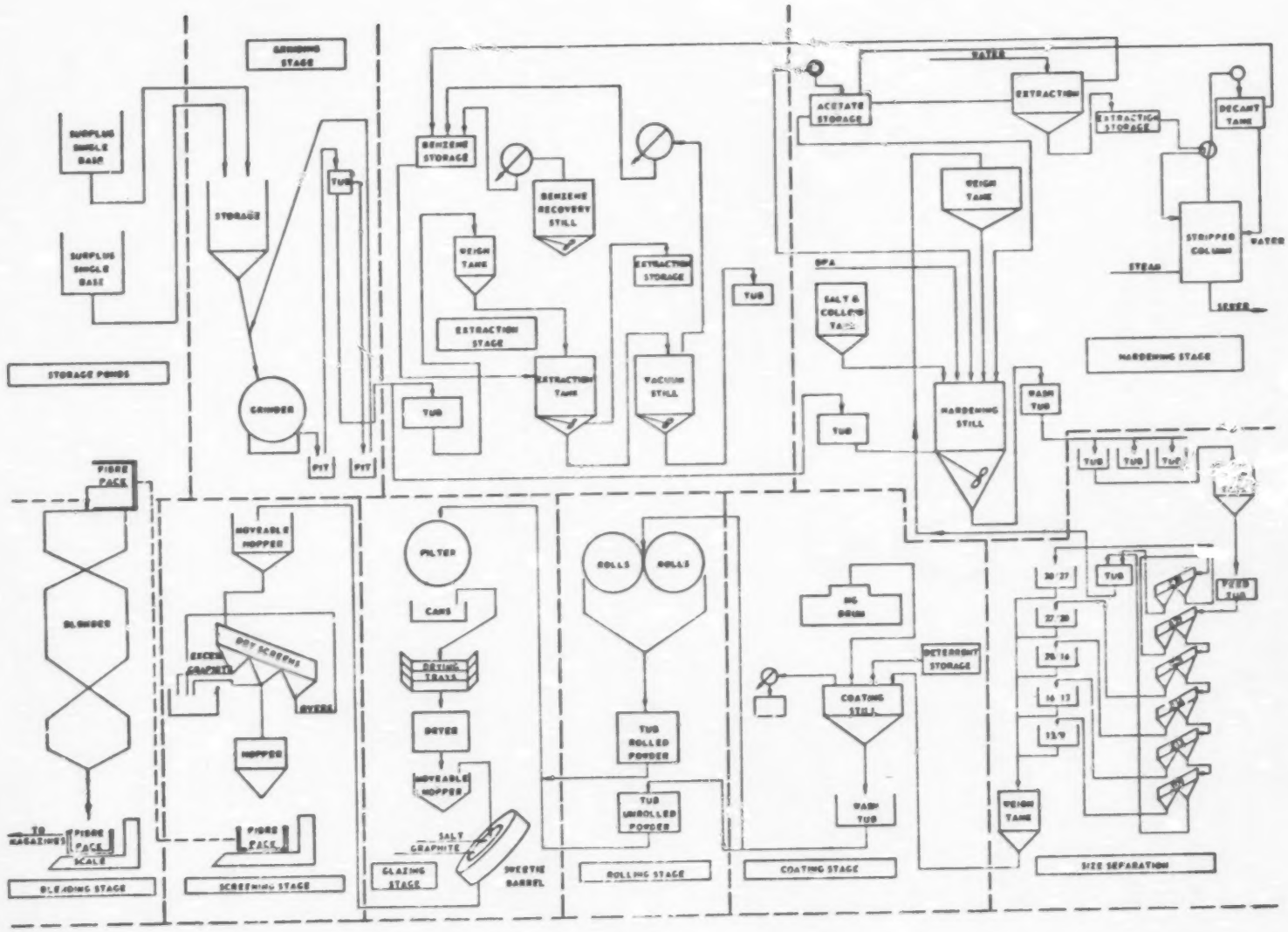

FIGURE 15 - BALL POWDER PROCESS AT BADGER AAP

are coated with graphite to minimize static pickup by tumbling in a "sweetie barrel" until glazed, then screened and packaged.

e. The cooling water used in the ball powder line is 100% recycled, but the process water is currently mostly discarded. It contains benzene, ethyl acetate, nitrocellulose, nitroglycerin, sodium sulfate, and collagen. At this writing, the line is under engineering study looking towards maximum re-use of water and optimum outfall treatments.

48. Black Powder.

a. Black powder is the oldest explosive in the inventory, the composition and manufacturing process having remained essentially unchanged for more than 100 years. It is still a critical component in the ignition charges and primers used in 90% of U. S. artillery ammunition, so it is by no means obsolete.

b. Manufacturing consists of mechanically compacting potassium nitrate, sulfur, and charcoal in a wheel mill. The pulverized materials are mulled together water-wet, and mulling is continued until all the water is evaporated. The mill cake or "clinker" is broken up and re-compacted at about 6000 psi in a hydraulic press. The hydraulic press cake is "corned" by passing it between rollers with corrugated surfaces, and the resulting pellets are tumbled with a small amount of graphite until they are dry, hard, and glazed.

c. No water is used in the process except for a small amount in the wheel mill, and that is all evaporated in the glazing step.

d. At this writing, all black powder is purchased from a commercial supplier; but a process is under design for installation in one of the AAPs, probably Indiana.

49. Pyrotechnics and Primer Mixes.

This category of explosives consists of a host of initiator materials such as lead azide, lead styphnate, tetracene, trinitroresorcinol, and others; made in small quantities, often on a mere bench scale. They are beyond the scope of this study.

SECTION II - MANUFACTURE OF NITRATING ACIDS

50. Introduction.

All of the basic explosives manufactured in the U. S. munitions complex are nitrated products, and this makes acid manufacture the largest operation in the system. At recent production rates, the tonnage of sulfuric acid manufactured was four times the tonnage of TNT and four percent of the U. S. total for all purposes. All explosives manufacturing plants make their own acid, and some of them have as many as 50 separate units.

51. Nitric/Sulfuric/Oleum.

a. Nitric Acid is invariably made by the DuPont Ammonia Oxidation Process (AOP). In this process, liquid ammonia is vaporized, mixed with air and passed under pressure over a Pt-Hg-Pd catalyst for conversion to nitric oxide. The nitric oxide is further oxidized to NO_2, and the NO_2 is absorbed in water in an internally cooled bubble cap column to form weak (approximately 60-65%) HNO_3.

(1) The weak nitric acid is concentrated by one or the other of two processes. In the usual Nitric Acid Concentrator (NAC), the weak HNO_3 is mixed with concentrated sulfuric acid and injected into the bottom of a distillation tower along with live steam. The sulfuric acid, being a powerful dehydrating agent, combines with the free water; and 98-99% HNO_3 distills overhead and is condensed. The still bottoms, consisting of approximately 68% H_2SO_4, are recovered and sent to one of the Sulfuric Acid Concentration (SAC) units discussed below. In an alternate nitric acid concentration process, the weak HNO_3 from the AOP unit is mixed with hot 72% aqueous magnesium nitrate, another powerful dehydrating agent. The hot mixture is passed through a stripping column, 99% HNO_3 distills out the top, and 60% aqueous magnesium nitrate drains out the bottom. The still bottoms are reconcentrated by evaporation and re-used.

b. Sulfuric acid is made by one or another version of the classic Contact Process wherein SO_2 is oxidized to

SO_3 and absorbed in 100% H_2SO_4 to yield 40% oleum which can be diluted with water to yield additional 100% H_2SO_4 or used as oleum in the nitration of feeds such as toluene. In the conventional version of this process, sulfur is burned in air to produce the SO_2, and the SO_2 is oxidized with more air over a vanadium pentoxide catalyst to produce the SO_3. In the closely related SAR (sulfuric acid recovery) process, the SO_2 is derived from the decomposition of spent H_2SO_4 in a cracking furnace. Either way, the SO_3 is fed to the bottom of a stripper column and either water or 100% H_2SO_4 is fed into the top. Either 100% H_2SO_4 or oleum, respectively, comes out the bottom; and unreacted SO_2 goes out the top to recycle or to the sellite plant if there is one.

c. Acid recovery takes several forms. In the older SAC (sulfuric acid concentration) process, spent HNO_3/H_2SO_4 from the nitrators is distilled. HNO_3 passes overhead, is condensed and is re-used. The still bottoms, consisting of concentrated H_2SO_4, are not re-used because of the slow buildup of impurities that would result; they are sold for commercial uses for which they are satisfactory. In the newer SAR (sulfuric acid regeneration) process, the spent H_2SO_4 is cracked in a furnace to yield a mixture of sulfur oxides and water. The sulfur oxides are oxidized to SO_3 as above and used to make new H_2SO_4 or oleum which is satisfactory for re-use.

(1) The eventual complete conversion from the old SAC process to the new SAR process, which is part of the modernization program, will have a major impact on the levels of acid production. HNO_3 is consumed in the manufacture of explosives, because it becomes part of the explosive molecule; but H_2SO_4 is only a reaction medium and catalyst. Consequently, as H_2SO_4 recovery and re-use rises, the necessary new production will fall; and the high production figures quoted above will become quite out of date.

d. Wastewater streams from the above operations are in principle practically nil, but in practice they are considerable due to the large scale of the operations. Nothing is 100% efficient, and there are always losses which appear in the wastewater. Each process has a tail gas stream which contains volatilized acids and oxides of nitrogen and sulfur.

These gases are passed through water scrubbers to abate air pollution, and their contaminants reappear as dissolved acids in the wastewater stream. In addition, there are always minor leaks, spills and washdowns; and these too appear in the wastewater. There are also sometimes sludges from still bottoms or from equipment corrosion, and there are salts from the lime or soda ash neutralization of spills and residues.

52. Acetic Acid/Acetic-Anhydride/Ammonium-Nitrate.

The nitration of hexamine to make RDX/HMX, unlike most other nitrations, is carried out in acetic acid - acetic anhydride solution. New acetic acid is purchased; but acetic anhydride is manufactured on-site, and spent acetic acid is recovered for re-use.

a. Acetic acid is recovered from spent nitrating acid mix. The spent acid, containing some nitric acid (which is neutralized with sodium hydroxide) and some RDX/HMX, is sent to a primary evaporator where about 80% of the acetic acid is vaporized, condensed, and recovered as 60% acetic acid. The remaining 20% is withdrawn as primary sludge, diluted, heated, and cooled. During cooling, RDX seed crystals are added to promote crystallization of the RDX content; and the crystals are removed by cyclone separators. The resulting liquid, called filtrate feed, is sent to a secondary evaporator and/or fed back to the primary evaporator. The recovered 60% acetic acid is concentrated to glacial (99%) acetic acid by azeotropic distillation with n-propyl acetate and sent to storage.

b. Acetic anhydride is made from glacial acetic acid by thermal cracking of acetic acid to ketene gas and reaction of the ketene with more acetic acid to form acetic anhydride. Glacial acetic acid is passed through a cracking furnace, and the water of reaction is removed by condensation. Any uncracked acid is concentrated by azeotropic distillation and recycled. The ketene stream is scrubbed with glacial acetic acid, and crude acetic anhydride is withdrawn from the bottom of the scrubber. It is refined by simple distillation and sent to storage.

c. Ammonium nitrate is made in an adjunct to the AOP nitric acid plant. Anhydrous ammonia and concentrated

nitric acid are injected into a circulating stream of the product, with strong cooling, and react to form more product. The resulting solution of ammonium nitrate in nitric acid is transported by tank car to the RDX manufacturing area where it is used as the nitrating agent.

d. Wastewater streams from these operations are several. In addition to the usual spill and leak washdown water, there are weak acid streams from tail gas scrubbers, organics in solution from the decantation of the water-n-propyl-acetate azeotrope and from the ketene scrubber, and sludge residues from acetic acid recovery and from equipment corrosion.

SECTION III - LOADING OPERATIONS

53. Introduction.

The final operation in the manufacture of munitions is the loading of the explosive or propellant into field hardware.

54. Melt-Pour Loading of High Explosive Warheads.

a. Bombs, shells, and similar ordnance items are typically filled with TNT or a mixture of TNT and other high explosives, poured in molten from overhead kettles and allowed to solidify. Water use is minimal compared to that in explosive manufacturing, consisting mainly of equipment washout and floor washdown. The following description is a composite of several different loading operations, fabricated to illustrate all major unit operations. A specific loading plant somewhere may be a considerably simpler operation.

b. Flake TNT arrives at the loading plant in box cars filled with one-cubic-foot cardboard boxes which were filled at the TNT manufacturing plant. The boxes are unloaded manually and sent up a conveyor belt to a dump station on the second floor where they are opened and dumped through a screen into a hopper. In some cases, the hopper discharges directly down into the melt kettle.

c. The melt kettle is typically a several-thousand-gallon stainless steel chemical kettle fitted with a slow-speed, anchor-type agitator and a steam jacket; and is located on the floor above the pouring floor. The TNT, Composition B or other formulation is charged through a hatch in the top of the kettle and melted with gentle agitation. Agitation is particularly important in the case of mixtures such as Composition B, where the RDX is in the form of a suspended, non-molten powder, and in the case of composites such as Tritonal, which has aluminum powder suspended in the molten TNT. The charge is heated to just above the melting point of TNT, typically about 78 to 82°C, at which temperature the mixture forms a mobile slurry.

d. Empty, prepared bomb or shell cases are positioned underneath the melt kettle; and the molten explosive is run into them by gravity until the case is filled to the mark. The "mark" may be near the top, or it may be part way up a temporary funnel attached to the top of the munition. TNT shrinks about 13% upon solidification, and the over-filled funnel feeds additional TNT down into the forming shrinkage cavity to minimize void formation. The filled munitions are sent to a holding area to cool and solidify.

e. After solidification, the funnels, if any, are removed; and the fuze cavity is trimmed to specification by hand. Fuzes and other hardware are attached, and the finished munition is packaged in boxes or on pallets and shipped out. Clean riser scrap, TNT trimmings and the like (but not floor scrap) are sent back to the melt kettle for re-use.

f. Once a day or once a shift, the melt kettles are allowed to drain as empty as they will; and are then washed out with water and dried. The casting areas, the wagons, the floors, the trimming areas, etc., are also washed down with water; as is the dumping area, the screens and the hopper. In some plants, a continuous spray of water is kept going in the boxcar unloading area to keep down TNT dust; and in some plants the working floors are kept wet with running hoses for dust and spark safety. Riser funnels, trays, reject munitions, and the like are steamed out; and the condensate is combined with the wash waters. The combined wash waters are collected in gutters and led to catch basins outside the building.

g. The water in the catch basins is known as "Pink Water". It is a saturated solution of TNT (which is about 100 ppm at room temperature); and it turns pink in the sunlight due to photolysis of dissolved TNT to form complex dye-like molecules. (The Navy calls Pink Water "Red Water", but this report follows Army usage in reserving the term "Red Water" for the more complex - and redder - wastewater from the sellite purification of crude TNT.) A sludge of solid TNT and other explosive ingredients collects in the bottoms of the catch basins and is periodically removed and burned.

h. Some melt-pour loading plants have exhaust fans over the flake dumping stations, the kettle hatches, etc., for dust removal. The dust may be caught in wet scrubbers or simply vented to the atmosphere. If it is caught in scrubbers, the scrubber drainings are added to the catch basins.

i. There is no process water as such in a melt-pour operation, and the only wastewater stream is the Pink Water from clean-up operations. It is small compared to the volumes of wastewaters from explosive manufacturing, and its treatment is a problem only in larger operations in the Northern and Eastern parts of the country. In the dry Western and Southern parts of the country, treatment consists simply of evaporation followed by burning of the dry residue. Treatment processes are discussed in detail in Chapter VI.

55. Extruded, Nitrocellulose-Base, Rocket Motor Grains.

Double base (NC/NG) propellants comprise an important class of solid rocket motor grains, made by hot extrusion as described in paragraph 46 above. The dies have channel inserts of various shapes to give hollow grains with round, cruciform or star-shaped perforations as desired. The extrusions are cut to length, and are dried and cured until their dimensions have stabilized. They are then trimmed to exact dimensions on a lathe. Their outer surfaces and ends are painted with a flame-retardant called a "restrictor" or "inhibitor" to confine burning to the inside surface. The finished grains are then boxed and shipped to the motor assembly plant where they are inserted into motor cases like batteries into a flashlight. Large ones may be cemented in place, and small ones may be simply slid in.

56. Cast-in-Place Rocket Motor Grains.

There are two general types of cast rocket motor grains: plastisol, and polymerization-cured. They differ little in their handling and still less in their wastewater aspects, and will be discussed together.

a. Plastisol cast grains are typified by the high-energy compositions used in advanced, solid rocket motor ICBM's and IRBM's. In this casting operation, a high-energy

"base grain" or "casting powder" such as described in paragraph 46 is poured into an upside down rocket motor case and vibrated to maximum bulk density. The air is exhausted by means of a vacuum bell, and liquid nitroglycerin or nitroglycerin mixture is run in so as to fill all the voids with liquid and give a dense slurry with no included bubbles. An internal star-shaped cavity is provided for by a removable lengthwise mandrel inserted during case preparation.

(1) The loaded motor is then placed in an oven at about 40°C for days or even weeks, during which time the liquid semi-dissolves the base grain pellets to yield a uniform, rubbery, solid gel. After cooling, the mandrel is pulled, any ragged propellant edges are trimmed up, the grain end is painted with restrictor, and the nozzle and ignitor hardware are attached.

(2) No water is used in the process, except minor amounts for clean-up and sometimes floor washdown, depending upon the particular plant. There may be steam coils in the curing ovens.

b. Polymerization-cured grains are cast in similar vacuum bells in similar-sized motors, and cured in similar curing ovens; but the mix preparation at the casting site is more complex.

(1) A pre-mix consisting of all the ingredients except the oxidizer is usually made in manually-operated equipment. This will typically be a thin slurry of aluminum powder in a liquid pre-polymer which will eventually become the polymerized binder, plus any minor ingredients such as stabilizers, burn rate catalysts, etc. The pre-mix is charged to the bowl of a several-thousand-gallon vertical mixer and shipped to the mixing building that way.

(2) The oxidizer, typically ammonium perchlorate, is fine-ground just prior to use in one or more hammer mills and collected in tote bins for shipment to the mixing building. The tote bins are positioned above the mixer, ready for remote addition upon command.

(3) The loaded bowl is attached to the mixer, the operators leave the area, and stirring is commenced under remote control. Oxidizer is added slowly, with mixing,

and with cooling to remove the heat of mixing, to form the final complete mix; and mixing is continued until the mass is uniform and smooth. Addition of the polymer cross-linking agent is made some time during this step, as early as possible for good mixing and as late as possible for longest pot life. The mixing may be done under vacuum for de-aeration, but usually is not for safety reasons.

(4) After mixing, the mixing bowl is lowered and transported to the casting site which may be another building some distance away. There it is positioned over the prepared motor case contained in a vacuum bell, and the propellant - a thick paste - allowed to flow down into the case. When the case is filled, the motor is either cured in situ by heating the bell or else removed to a curing oven as in the plastisol procedure. The empty bowl is taken away for cleaning.

(5) Clean-up procedures vary widely from plant to plant, and constitute the only use of water except for heating and cooling coils. Most plants wipe down the mixers and containers with solvent-soaked rags only and use no water there, but some hose down the floor and some hose down the oxidizer grinders and chutes. Still other plants rigidly exclude any water at all (except for emergency fire deluge systems) and hermetically seal their oxidizer preparation systems with pressurized, dry air or nitrogen. However, to keep things in perspective, even those plants which use water "liberally" use much less than, say, a melt-load plant, and vastly less than an explosive or propellant manufacturing plant.

57. Pressed Explosive and Pyrotechnic Charges.

a. Pressing or compression molding is used to load a few specialty items such as illuminating flares, black powder delay trains, and a few developmental explosives; but the quantities used and the numbers of items produced are miniscule compared to the major items discussed above. Almost no water is used except for some floor washdown, and only brief mention of the process will be included here.

b. Typically, a semi-dry, granular ingredient mix including the binder if one is used is made in a muller or

similar mixer and sent to the loading station in gallon-sized buckets. There, an empty illuminating shell (for example) is positioned under a raised plunger behind a safety barricade. An operator pours in an inch-or-two layer of mix from a hand scoop and presses it home with the hydraulically-actuated plunger. Additional lifts are added in the same way until the shell is filled. Any excess is trimmed, and the shell is sent on to have other hardware attached.

c. A few, developmental, shaped, high explosive charges are also now being made by compression molding; but the operations are very limited in scope, use almost no water, and have no appreciable impact on the industry wastewater picture.

SECTION IV - APPROACHES TO WATER POLLUTION ABATEMENT

58. Introduction.

The major discussions of water pollution abatement in this report are presented in the Chapter VI, but some of the approaches are so integrally tied in with manufacturing technology that they deserve introductory mention here.

59. Manufacturing Improvements.

a. Some explosives manufacturing activities involve operations which are inherently generators of wastewater pollutants, such as the sellite purification of crude TNT; and major improvements can be made if the process itself can be improved.

b. The CIL continuous process, described earlier, is one such improvement. It produces approximately 20% less Red Water than the older batch TNT process by producing smaller quantities of undesired isomers, by using some preliminary water washes which can be fed back to the nitrators, and by using multi-stage, countercurrent sellite treatment which is more efficient.

c. Another and more extensive process improvement currently under study at Stanford Research Institute promises to make approximately an 80% reduction in Red Water if all goes well. Its key is operation at low temperature - around -10°C - under which conditions a much lower percentage of undesired isomers are formed. The process is currently somewhere between bench and pilot scale, and it will not have an immediate impact.

d. A program which will have an earlier impact is research and development towards reclamation and re-use of the constituents of Red Water. Figure 16 illustrates the concept schematically. In this concept, the ash from Red Water incineration is reduced chemically to yield sodium carbonate and hydrogen sulfide which are recycled to make new sellite solution. Fumes from the evaporation and incineration steps are caught in activated carbon which is subsequently incinerated or regenerated, rather than caught

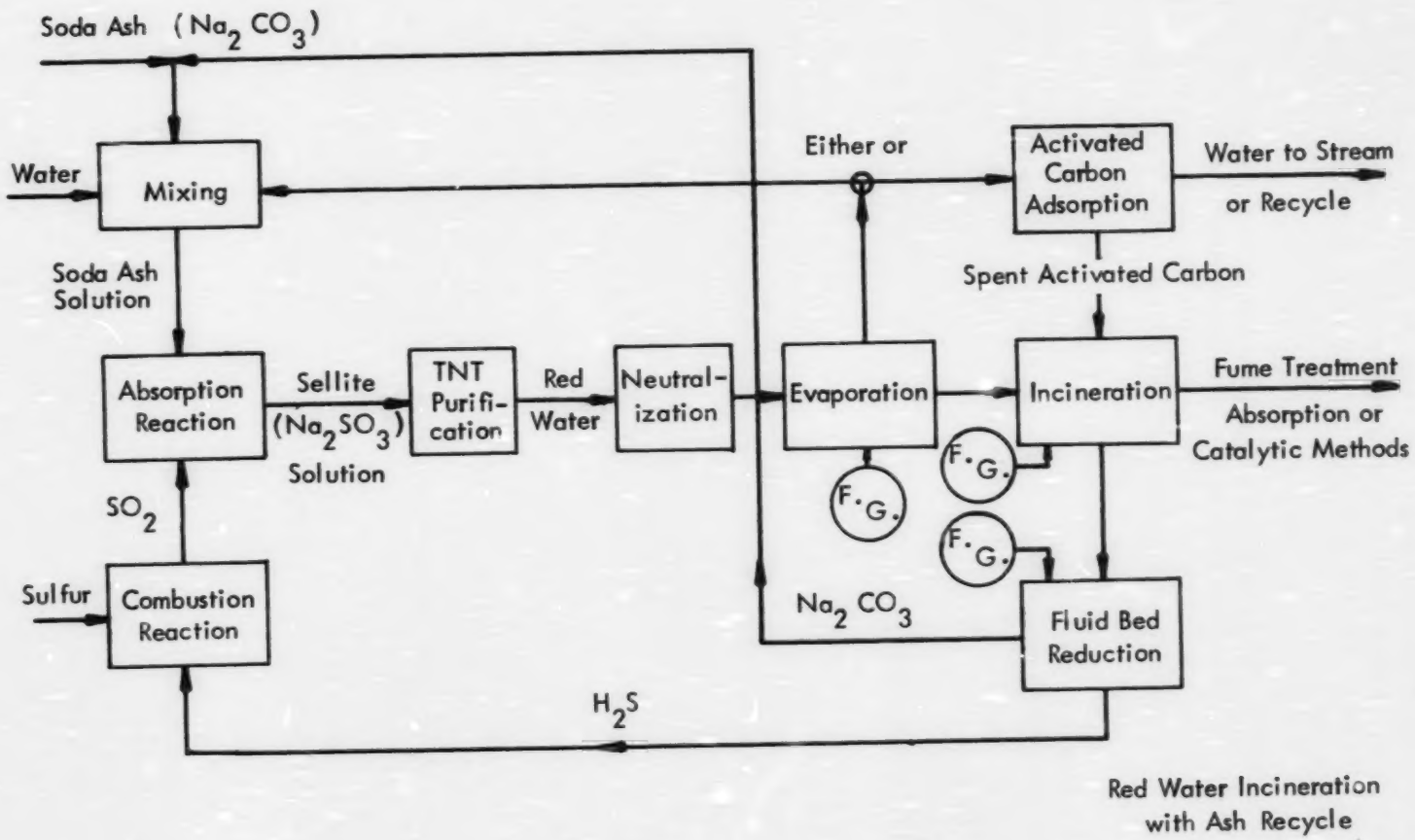

FIGURE 16 - RED WATER RECLAMATION CONCEPT

in a water scrubber which would itself be a water pollution generator. At this writing, the ash reduction step is in the laboratory stage and the carbon regeneration step is in the pilot stage. It is not yet clear how successful they are going to be.

e. Longer range again, exploratory laboratory research is underway to reclaim the organic components of Red Water by desulfonation and conversion to materials of commercial interest. The promise of this program has not yet been established.

f. Similar, although generally less dramatic, process improvements are under study for RDX/HMX, nitrocellulose, ball powder, acetic acid manufacture and sulfuric acid regeneration.

60. Water Management.

a. In contrast to the inherent waste streams considered in the above section, there are numerous wastewater streams which could be greatly reduced or eliminated by relatively simple measures such as cascading, recycle, or re-use; and the Army is currently studying this approach in great detail. Among the processes being analyzed for possibilities are: Nitrocellulose, nitroglycerin, TNT, NC propellants, ball powder, RDX/HMX, tetryl, acetic acid, nitric acid, black powder, and sulfuric acid recovery. Nitrocellulose will serve as an illustrative example.

b. Figure 17 shows the general product flow and the water balance for a typical batch nitrocellulose line. This particular line operating at capacity uses 2.24 MGD of new water and 0.20 MGD of recovered water for three basic purposes: (1) conveying NC as a 3-10 percent slurry from one operation to another; (2) boiling and neutralizing the NC for stabilization; and (3) washing the NC.

c. A modified process under review at this writing is shown in Figure 18. In this system, the flume line water carrying NC from the nitrator is recovered by filtration and largely re-used; and the slurry water itself is used for the first, acid boil. Water from the first neutral boil is saved and used as make-up water for the flume line. The balance of the water used is sent to the poacher pits,

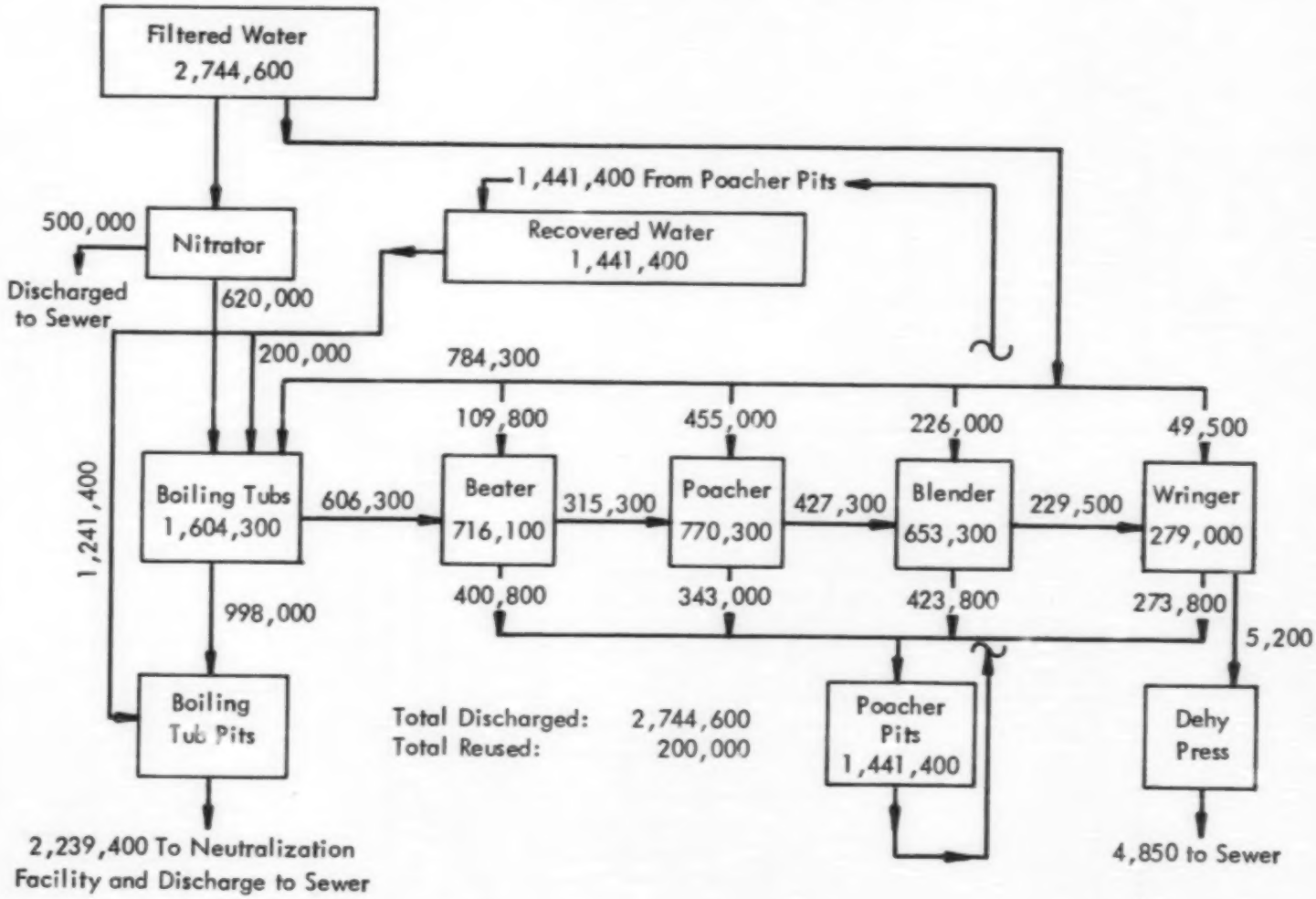

FIGURE 17 - CURRENT WATER BALANCE, BATCH NC LINE

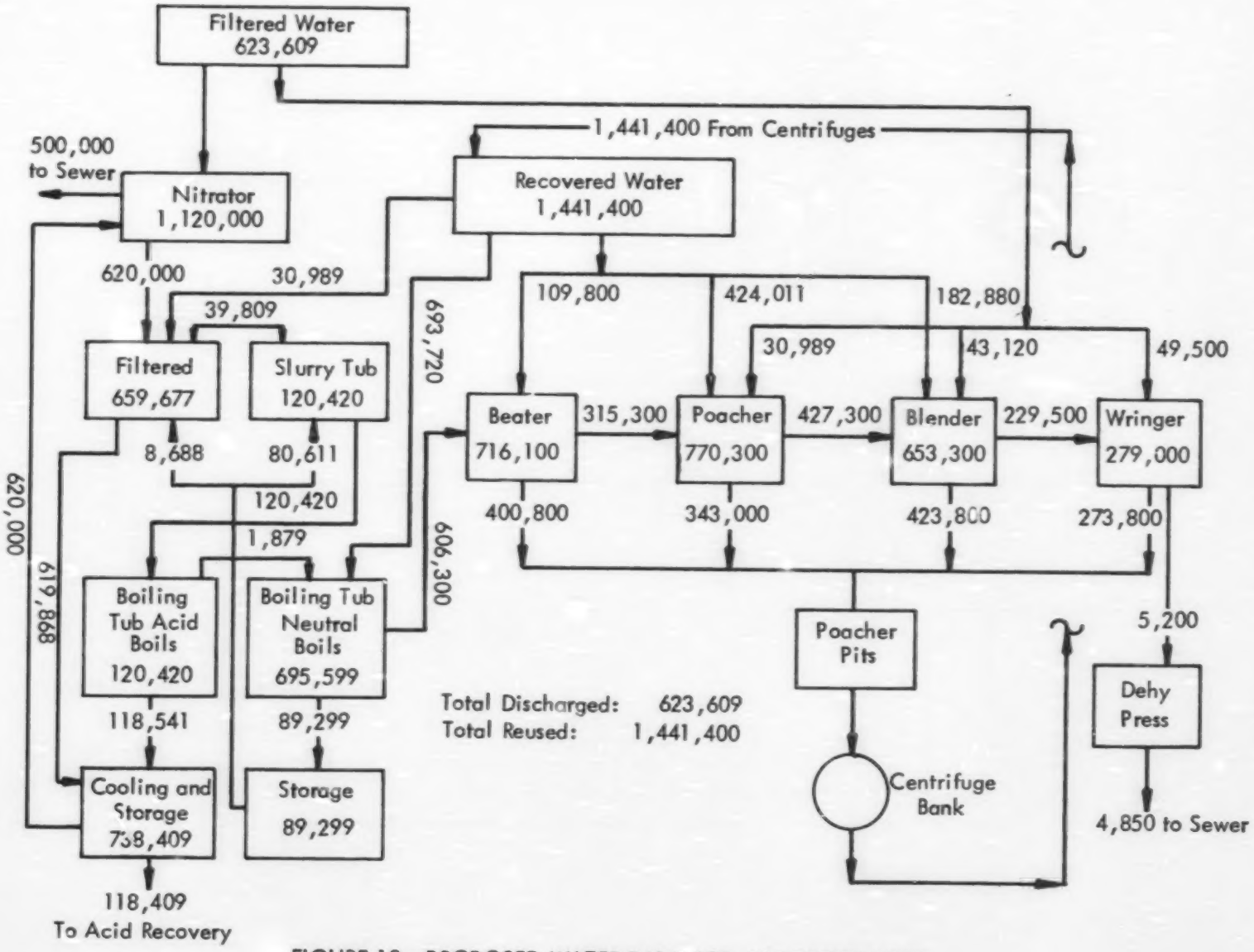

FIGURE 18 - PROPOSED WATER BALANCE, NC BATCH LINE

clarified by centrifuges, and pumped to the recovered water tank for re-use. The cooling water from the nitrator is uncontaminated except for the added heat, and could be cooled and re-used, or re-used elsewhere in the plant if desired.

d. The net result of these improvements in this operation would be to reduce the new water requirement from 2.24 MGD to 0.12 MGD. The remaining discharge would be to an acid recovery plant where approximately 170,000 pounds of acid would be recovered daily, eliminating the need for neutralization plants and further nitrate and sulfate treatment. The total water discharged would be 623,609 gpd instead of the current 2,744,600 gpd; and it would be cleaner water due to the recovery instead of the neutralization of the waste acid.

e. Similarly impressive results are projected for other major operations, including TNT, RDX/HMX, and acetic anhydride manufacture.

f. It might be wondered why the plants were originally finalized with so much opportunity left for improvement, but it must be realized that they were designed and built over 30 years ago in a very different era when water was cheap and plentiful and pollution had not entered the national thinking. Moreover, these modernization improvements do not come without cost. Capital funds are needed for the required new construction and require the approval of the U. S. Congress. In addition, the improved plants are more complex and will most more to operate and maintain. A balancing of national values and priorities is still needed before making changes.

61. Outfall Treatment.

When process improvements and water management have done all they can, there still usually remains an irreducible flow of wastewater carrying by-products and impurities, and spills and washdowns. These residual flows have been and are the subject of intensive research and development in DOD and contractor laboratories, and numerous final treatments are under development for ultimate clean-up. These outfall treatments are discussed and evaluated in detail in Volume III, Chapter VI, and conclusions and recommendations are presented in Chapter I.